Instrumentation and Measurement
Technology Conference – IMTC 2007
Warsaw, Poland, May 1-3, 2007

A Remote Electrical Engineering Laboratory based on Re-Configurable Hardware

K. Efstathiou, D. Karadimas and K. Zafeiropoulos
Department of Electrical and Computer Engineering, University of Patras
Rion Campus, 26500, Greece
Phone: +30-2610-996-425, Fax: +30-2610-996-818, Email: *efstathiou@ee.upatras.gr*

Abstract *– This paper describes an Internet-based laboratory, named Remote Monitored and Controlled Laboratory (RMCLab) developed at University of Patras, Greece, for electrical engineering experiments. The key feature of this remote laboratory is the utilization of real experiments, in terms of instrumentation and under measurement circuits, rather than simulation or virtual reality environment. RMCLab's hardware infrastructure contains multiple reconfigurable sub-systems (FPGAs), which can be enhanced by almost any analog expansion module. The main characteristics of this system include the versatility of the hardware resources, due to the dynamic reconfiguration potentiality and the low cost of the hardware components. Moreover, this system enables its users to test, in real time, their own custom circuit designs. The paper concludes with a specific example regarding an elementary circuit in digital electronics. RMCLab can be accessed via the web through http://www.apel.ee.upatras.gr/rmclab.*

Keywords *– Client-server architecture, remote laboratory, distributed instrumentation and resources.*

I. INTRODUCTION

The exponential growth of computer and internet technology enables the development of complex, hybrid systems such as remote laboratories where experiments can be remotely accessed, monitored and controlled [1]-[3]. This new interpretation of the measurement process offers to anyone the opportunity to interact with the laboratory at any time, reducing at the same time the experiment cost per user and extending the capabilities of the entire experimental framework.

Paradigms of using these advanced facilities apply either for educational purposes [4]-[5] or for products' advertisement. Remote laboratories can offer high-level experimental training and experience, when they are able to realize, support and interact with real experiments, rather than present simulation results or simple depiction of reality. Additionally, expensive, often dedicated experiments, of modern, cut-edge technology can be shared worldwide, contributing thus to a high-valued remote laboratory framework.

Many internet-enabled software systems that afford distance laboratories via simulated, virtual environments can be found in the web [6]-[7]. These software systems often integrate many of the desired functionalities, especially from the user's side, such as accompaniments to the experiment documentation, communication support and collaboration among their users. Although modern simulators can accurately estimate circuits' performance, the employment and utilization of real circuits and real instrumentation, for electrical engineering laboratories [8], ensures the measurements' reliability, while at the same time increases the educative value of the remote laboratory.

Remote laboratories offering access to real lab-experiments and real instrumentation also exist, however the majority of them cannot share their resources simultaneously to many users, thus they fail to serve and support large classes of several hundreds of students.

This paper presents the specifications and the basic structure of an integrated remote laboratory platform that enables the instant remote access to real lab-experiments, employing real hardware and real instrumentation. This platform, named Remote Monitored and Controlled Laboratory (RMCLab), is able to provide high-level services to a great number of users for a wide-range of real electrical engineering experiments; either pre configured, reconfigurable or customizable, at a very low hardware infrastructure cost. RMCLab offers its services since March 2004, at the Dept. of Electrical and Computer Engineering of University of Patras, Greece, where it was developed and implemented.

II. PROPOSED APPROACH

The basic purpose of the developed platform is to provide high-quality lab-training in electrical engineering subjects to students, all over the world. The design of such a remote laboratory for real-time, internet-based lab-experiments, should consider all aspects of the system, including communication and data flow, as well as instrumentation and hardware control [9]-[10]. RMCLab system has been designed so as to integrate all potentials of a physical laboratory to a simple user interface, among with other sub-systems, such as lab-administration, instrument operation and hardware management.

The primary service that RMCLab platform should provide to its users is the possibility to study on the lab-experiment subjects, by accomplishing their measurements at any time and from anywhere. For this reason, RMCLab's basic specification is defined as the ability to serve at any time, simultaneously and at real time, any

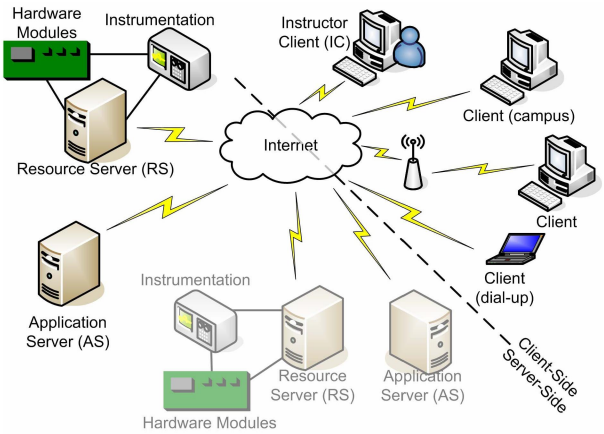

Fig. 1. RMCLab system overview.

potential user for any available lab-experiment. On the other hand, an integrated remote laboratory platform should reinforce lab-administrator's tasks and responsibilities, regarding the experiment setup, hardware and instrumentation control, users' management and also lab-maintenance. RMCLab offers also many kinds of assessment functionalities for the students' lab-skills, regarding the lab-experiments, such as the assignment of several different evaluation criteria (measurements, instrument settings and multi-type questions, etc), so as the whole platform can be configured as an advanced tool for automated, high level educational services, an aspect that characterizes the offered educational activities and also our initial motivation.

III. ARCHITECTURE

RMCLab system has been developed based on the conventional client-server architecture, expanded in the server-side, as depicted in Fig. 1, and consists of the following basic entities: client, instructor-client (IC), application server (AS), resource server (RS) and lab-infrastructure, including the real instrumentation and all the hardware modules.

A. Network topology

The server-side of the proposed architecture employs at least two sub-servers; the resource server and the application server. This structure could also be replicated in a more complex network topology. Resource server manages and operates hardware and instrumentation resources, providing to application server an abstract layer for communication that enables access to lab-infrastructure.

Application server undertakes the data flow control task between clients and the physical remote laboratory, realized by the resource server and the lab-instrumentation. The intermediary role of the application server is mandatory, since clients should not be to directly communicate with any of the resource servers. The communication between application server(s) and the resource server(s) or the client(s) is based on a custom, abstract language that integrates all potential tasks of a conventional, physical laboratory.

This topology simplifies the architecture of the server side and expands platform's capabilities, as it facilitates the robust development and customization of a resource server. Moreover, it enables many application servers to utilize the components shared by the resource server(s). As a result, users all over the world are able to transparently access, via the application server(s), these shared resources. Additionally, application server grants to its clients transparently access to the real resources of the physical laboratory, thus increasing system's robustness, flexibility and expandability.

B. Hardware, Instrumentation and Resource server

The real measurement laboratory is based on a low cost and easy implementation, while it is realized around the resource server. Resource server is equipped with suitable, interfaces toward the signals of lab-experiments (both digital and analog experiments), via a custom, LPT based bus, and the instruments, via the RS232 interface or the GPIB bus, as depicted in Fig. 2.

Multiple types (standard, programmable, pre configured or re-configurable) of analog, digital or mixed circuits can be hosted in the platform's resource server(s). For this reason RMCLab's hardware is outfitted with a motherboard that is able to host up to 64-cards, where each of them incorporates an FPGA and extra auxiliary circuitry required for implementing the lab-circuits, as depicted in Fig. 3.

Each card employs also a PLD, which is responsible for the card addressing and the configuration of the FPGA. Each of these cards can host 8-different analog, digital or mixed independent arbitrary circuits, since the FPGA is segmented into 8-sectors, each of them corresponding to a specific lab-experiment. The internal operation of the FPGA is controlled by a register file (Table 1) which is employed within it.

As each sector of the FPGA can host either a specific multi-mode lab-experiment or a user's custom circuit, the mode register and two auxiliary registers control its operation mode and behavior, while sector register points to the active sector, on which measurements are performed. Therefore, a single sector could implement alike lab-circuits, which can be

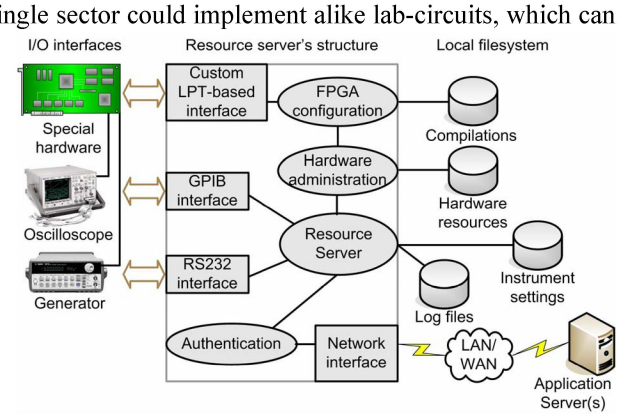

Fig. 2. Software and hardware modules of the Resource server.

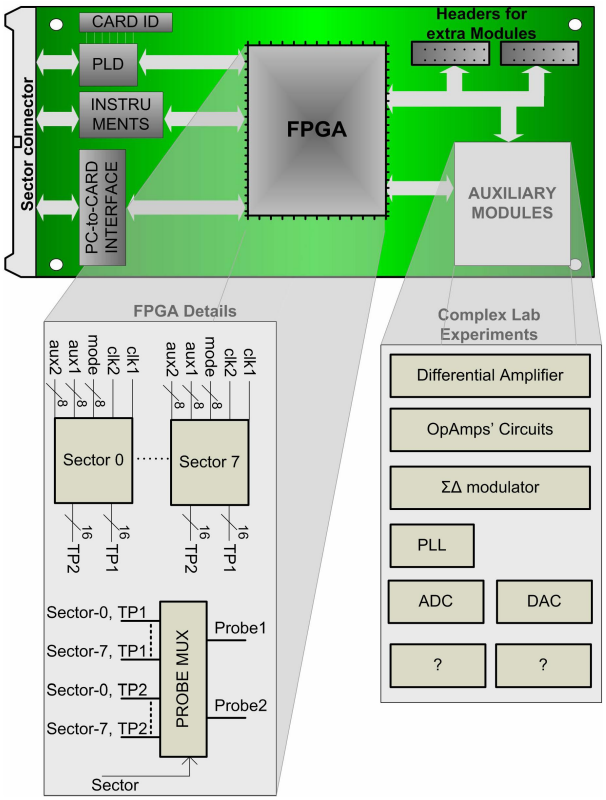

Fig. 3. Hardware architecture.

externally presented as different lab-experiments, while the selection of the operation is performed by the value of the mode register. For example, in our case, both synchronous and asynchronous digital counters are implemented in the same sector, but are presented as two different lab-experiments. Moreover, when a measurement is carried out, two extra registers, Probe1 register and Probe2 register, assign the active nodes of the active sector, on which the two probes of the oscilloscope become physically connected through cross point switches. Finally, each card may be offline equipped with additional on board or external circuitry, in order to implement a wide range of more complex electronic circuits, including PLL-based Frequency Synthesizers, several types of D/A or A/D Converters, ΣΔ Modulators, etc.

The aforementioned hardware architecture characteristics in combination with the network topology complexity necessitate an elegant and efficient management of the hardware resources and the measurement requests. A hardware administration module, depicted in Fig. 4, within the resource server, undertakes this management role. A

Table 1. FPGA register file

Name	Address	Width (bits)	Operation
Sector	0	3	Select the active sector
Probe1	1	4-6	Select the active nodes of Oscilloscope's Ch-A
Probe2	2	4-6	Select the active nodes of Oscilloscope's Ch-B
Aux1	3	8	Auxiliary register 1
Aux2	4	8	Auxiliary register 2
Mode	5	8	Sector's operation mode

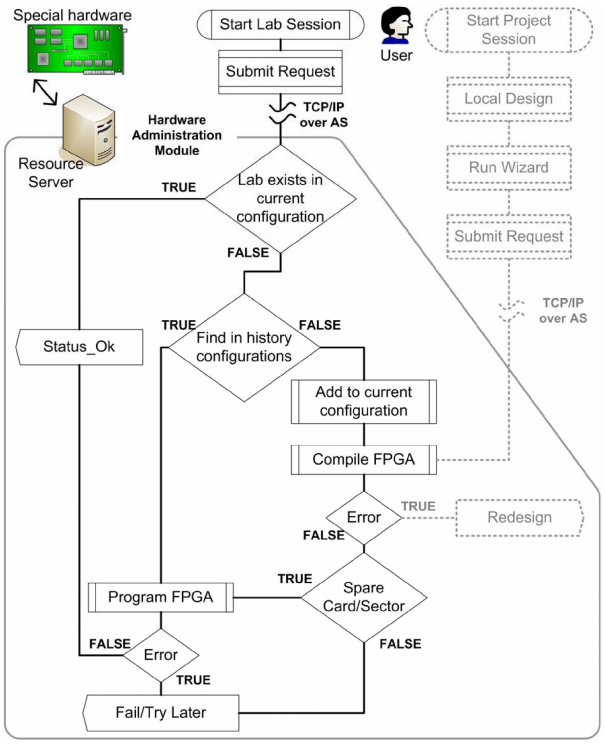

Fig. 4. Hardware administration module flowchart.

measurement transactions starts when a client raises a measurement request, regarding either a pre-configured lab-experiment or a user's custom circuit. The later is discussed in details in Section IV. After the request is raised to the corresponding application server, by a client, is logged and forwarded, via the same application server, to the proper resource server, which supports the under measurement circuit. Afterwards, resource server has to accomplish multiple tasks, such as the authentication of the request and the lab-infrastructure (hardware and instrumentation) setup, so as to be prepared for the requested operations. This may lead to a real-time, online re-configuration of one's card FPGA, so as to implement the requested circuit, or even to the removal of an unutilized sector's circuit, if an empty sector cannot be found. As soon as the hardware is configured, the measurement is performed and the acquired data are transmitted back to the specific client, again via the application server. The above procedure has been designed so as to time-share the lab-infrastructure, in a FIFO priority, to all available requests.

C. Application server

Apart from the dataflow control and the routing procedure between client(s) and the resource server(s), application server is also responsible for the authentication and logging, as well as for the assessment and evaluation of its clients' actions, when educative usage is intended. The above presented characteristics and functionalities of the application server define its architecture, as depicted in Fig. 5. Additionally, each one of the application servers of the RMCLab platform needs to be offline aware of the resource

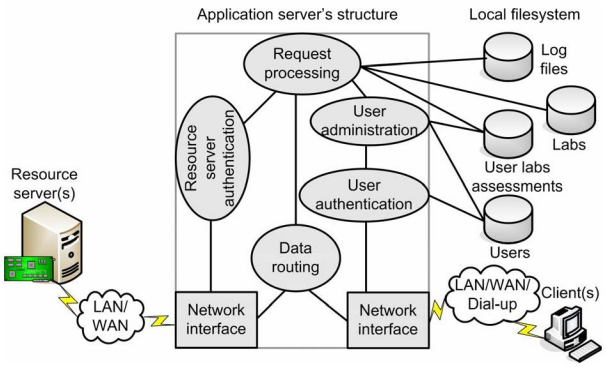

Fig. 5. Software modules of the application server.

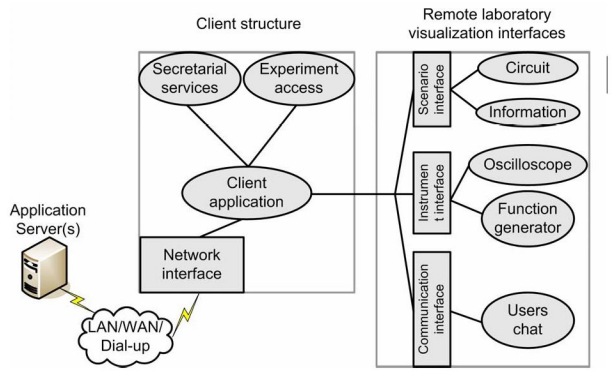

Fig. 6. Software modules of the client.

servers, that are able to communicate with, and their list of supported circuits, which are dynamically acquired upon each successful transaction with one of the resource servers.

Application server comprises also an advanced tool for the development and maintenance of a laboratory class that is available to the administrator of the laboratory, as can it be unrelated to the location of the physical laboratory, realized by the resource server, the hardware and the instrumentation. The development and maintenance of a laboratory class has been merged into a single database system, which contains all the required data for the design and assignment of a lab-exercise. Additionally, the same database system includes data regarding the students. One lab-exercise may consist of several active-images, which correspond to the real lab-circuits. For each lab-circuit, test-points and active-elements (switches and variable components) can be assigned. Hardware properties required for the assignment of the test-points and the active-elements are specified in the custom abstract language, used by the RMCLab system. On the other hand, a lab-exercise is separated in several steps, where each step may contain information, regarding the theoretical and practical aspects, measurements, multiple choice questions and a free-text question. Moreover, assessment rules may be provided in each lab-step. Along with the lab-exercises' data, students' data, regarding their personal information and assessments are stored in the same database system.

The layered networking of the RMCLab system permits each laboratory administrator to present a lab-experiment, running at a specified resource server, according to his personal educational aspects, regardless of the physical location of the real hardware of the lab-experiment.

D. Client

The client-side of RMCLab's system has been designed so as to comply with the demands of a potential user. Thus, client module embeds a specific interface, named as 'scenario interface', for supporting the remote monitor and control of lab-infrastructure, and other full functional and user friendly interfaces for lab-instrumentation (function generator, oscilloscope, etc), as depicted in Fig. 6.

In more details, scenario interface provides a user with graphic information, related with the under study circuit. Additionally, grants to the user the control of circuit parameters (variable pots, caps, etc) and also the monitoring of any active node of the circuit, by selecting and setting the probes of the oscilloscope and the function generator on the circuit. Moreover, extra documentation, regarding the technical and theoretical aspects of the experiment, which can also be separated into multiple steps, can be presented to the user, via the scenario interface.

E. Communication module & Instructor-client

In order to meet the basic requirements of the collaborative interactive e-Learning, a communication interface has been incorporated into the RMCLab system. This communication interface consists of a simple chat module enabling the collaboration and the information exchange, during a remote lab-experiment. The communication interface has been integrated into the RMCLab system by request of its early users, while it is under development the expansion of the chat module with voice and video capabilities.

Finally, RMCLab's platform embeds an identical to the user's client module, named as instructor-client, which offers to a supervisor/instructor of the experiment the ability to replicate, monitor and control any online user's lab-environment. This feature is focused on the educational aspect of RMCLab platform, as it provides an instructor with the ability to closely observe and efficiently tutor the actions of any online users, concluding to a 'near-to-real' lab-environment.

F. Architecture overview

The described hardware architecture is suitable for developing circuits of low-to-medium complexity, at a low-cost. For accessing the properties of this specific hardware, a software driver has been developed and embedded in the resource server application. Apparently, the platform is able to employ and control any hardware, under the condition that the corresponding software driver enables its access. Thus, even the use of complex or commercially available products is possible.

Additionally, the abstract language used to communicate RMCLab entities each other, can be modified according to

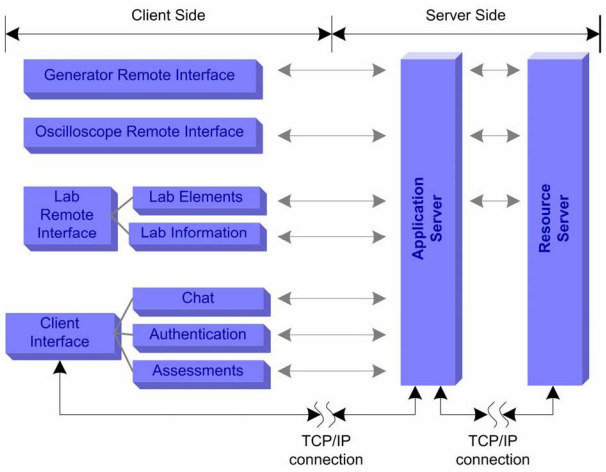

Fig. 7. RMCLab system's dataflow overview.

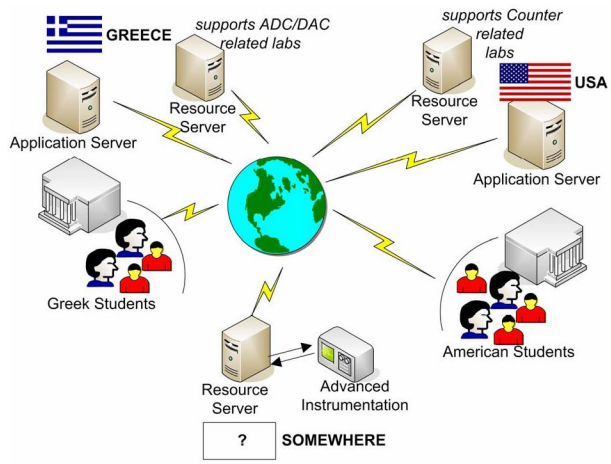

Fig. 8. Advanced RMCLab utilization.

future or different requirements. Fig. 7 depicts the dataflow diagram among the RMCLab entities and focuses on the correspondence between them.

IV. ADVANCED PROPERTIES OF THE RMCLAB

Conventional lab-education is based on the study of pre-defined lab-experiments. RMCLab system provides an outstanding benefit to its users, thus the feasibility to design and test/measure their own custom circuits under real hardware and real instrumentation. RMCLab users can offline design almost any circuit using separate software package (MAX+plus II or Quartus, both offered at no-cost for academic institutes from Altera). Using one of the aforementioned specific software packages, one can design his own circuits following a reduced set of rules and confirm by simulation its proper operation. Once the design is verified at the client-side, it can be easily uploaded to the server-side and after a while (<15 seconds) he will be able to perform any measurement on his custom design, which is now implemented on real hardware, by employing real instrumentation. The aforementioned procedure is supported by the hardware administration module of the resource server, as depicted in the dotted part of Fig. 4.

The network architecture of RMCLab platform enables the world-wide distribution of resources, in terms of lab-experiments, by utilizing multiple application servers in a single network topology, as depicted in Fig. 8. Thus, instructors all over the world can take the advantages of employing a running lab-experiment and present it in their native language and personal educational point of view. Obviously, each supervisor has the opportunity to review his users' performance by his own criteria, according to the assessments rules for each experiment, that are defined in the RMCLab's application server, which is available and accessed by the supervisor, as resource server transparently executes the measurement requests.

The prospects of the RMCLab system may hopefully expand world-wide, as the above scenario can be further extended if one adds more resource servers, as depicted in Fig. 8. Each resource server can be expert and focused on a specific subject, incorporating the appropriate hardware and instrumentation. Instructors all over the world may take the advantage of using such laboratory resources and develop educational material in their local application servers, in their native language, according to their own educational criteria, so as to offer advanced experimental training to their students, without any requirement for the development and maintenance of any expensive lab-infrastructure.

RMCLab's advanced utilization modes are not limited within the above example. The real-time use of real hardware and real instrumentation can significantly contribute to the educational procedure, since it enables an instructor to prepare 'Active Lessons' and present in details, during a class, the operation of a circuit or a system under real world circumstances, while at the same time can be utilized as a mean of demonstration for expensive products.

V. THE REALIZED RMCLAB SYSTEM

A. Technical characteristics

The architecture described in section III has been implemented at the University of Patras, Greece. Current configuration is a cost effective implementation, which consists of a single PC, with an Intel Hyper-Threading 2.6GHz processor and 1024MB RAM, embedding both the resource and the application server of our running RMCLab system. This PC, running Windows 2003 Server, is permanently connected to the campus LAN and also to an Agilent 54622D mixed signal oscilloscope and an Agilent 33120A function generator. Oscilloscope is connected with the PC via a high-speed GPIB interface, while function generator is controlled via RS232 @19.2kbps. The PC-interface with the hardware modules is implemented based on a custom, low-cost bus, through LPT in EPP mode. Each card of the hardware infrastructure contains an Altera FPGA of the FLEX8K series and also other components required for the implementation of the experimental circuits.

Table 2. RMCLab time response characteristics.

Property	Average Delay (sec)
Hardware setup and measurement time	3
Compilation time of a custom circuit	10
Hardware re-configuration time	5
Measurement delay from client side using PSTN line @56kbps	<5

The aforementioned infrastructure provides fast enough access and response (<3-secs per measurement) to the client requests, as summarized in Table 2.

B. A simple educational paradigm

Fig. 9 illustrates the measurement result, regarding the CLK and LOAD signals of an Early Decoding, Count Down, 4-bit Decimal Counter. The top part in Fig. 9 depicts the circuit information available to RMCLab users for the specific circuit, while the middle and bottom part depict the measurement representation of the real oscilloscope and the remote interface, respectively. Obviously, RMCLab system is able to take full advantages of the real hardware and real instrumentation utilization, providing measurements, regarding a wide variety of signals' properties, and the full control of both instruments (oscilloscope and function generator).

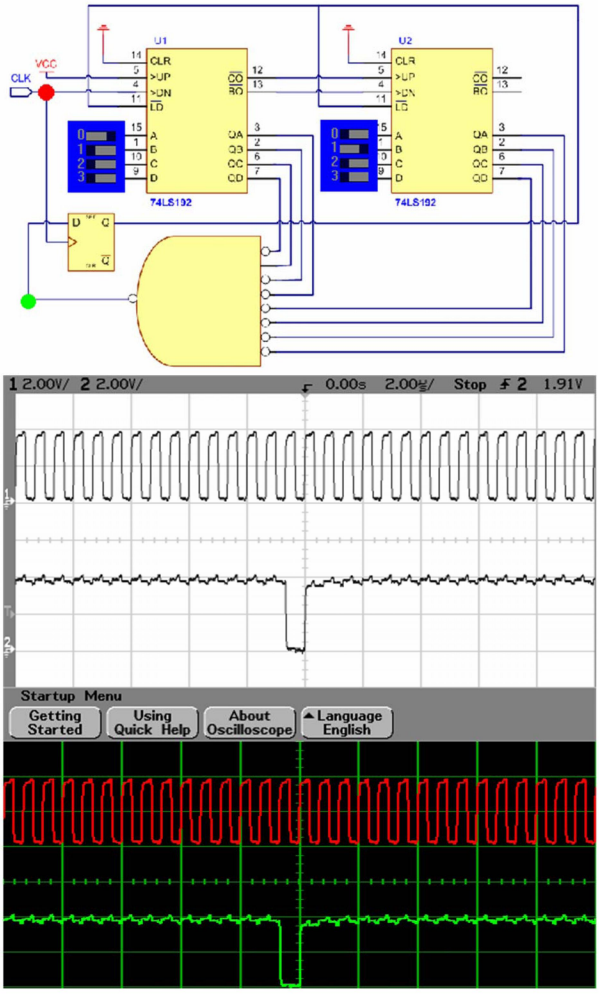

Fig. 9. Educational paradigm of RMCLab usage.

VI. CONCLUSION

RMCLab platform is able to provide a wide range of high educational services in a great number of students. It increases the productivity of the students by enabling them to have access to the lab-infrastructure at non working hours, while at the same time affects significantly their psychological mood regarding the level of the offered education by their institute.

Moreover, RMCLab accomplishes its services employing a single PC and a single set of hardware and instrumentation, thus pointing out that is able to provide high-quality lab-education at low-cost, without time consuming human insteraction.

The structure of RMCLab enables sharing of hardware and instrumentation resources, thus makes possible the extensive exploitation of an expensive lab-infrastructure, facilitating the wide spread of remote real lab-experiments, which are indisputably valuable for engineers' education. Additionally, hardware re-configurability permits the remote implementation and measurement of electronic circuits, providing further more a high-valued educational service.

It is anticipated that the proposed architecture guidelines along with the success of the RMCLab platform will motivate educational community to cooperate, so as to develop an integrated World Wide Lab environment.

REFERENCES

[1] Harry Boldt, "Didaktisches Design medialer Lernangebote im Umfeld ingenieurwissenschaftlicher Laborpraktika: Didactical Design of media learning offers in the surrounding field of engineer-scientific laboratory practical courses", University Duisburg-Essen, Campus Duisburg, Aachen 2005

[2] G. Mason, "A handheld data acquisition system for use in an undergraduate data acquisition course", *IEEE Trans. on Education*, vol. 45, No4, pp. 388-393, November, 2002.

[3] J. Sebastian, D. Garcia & F. Sanchez, "Remote-access education based on image acquisition and processing through the internet", *IEEE Trans. on Education*, vol. 46, No1, pp. 142-148, February, 2003.

[4] P. Lin & M. Lin, "Design and implementation of an internet-based virtual lab system for eLearning support", *Proc. 5th IEEE International Conf. on Advanced Learning Technologies*, Kaohsiung, Taiwan, 2005, pp. 295-296.

[5] A. Bagnasco & A. Scapolla, "A grid of remote laboratory for teaching electronics", *2nd International LeGE-WG Workshop on e-Learning and Grid Technologies: a fundamental challenge for Europe*, Paris, 2003.

[6] J. Palop & M. Teruel, "Virtual work bench for electronic instrumentation teaching", *IEEE Trans. on Education*, vol. 43, No1, pp. 15-18, February, 2000.

[7] C. Daly & J. Horgan, "An automated learning system for java programming", *IEEE Trans. on Education*, vol. 47, No1, pp. 10-17, February, 2004.

[8] Dimitris Karadimas and Kostas Efstathiou, "Design, Implementation and Evaluation of a Remote Laboratory System for Electrical Engineering Courses", Proc. 6th IEEE International Conf. on Advanced Learning Technologies, Kerkrade, The Netherlands, 2006, pp. 408-412.

[9] T. Fjeldly & M. Shur, "Lab on the web: Running real electronics experiments via the internet", Wiley-IEEE Press, 2003.

[10] C. Ko, B. Chen & J. Chen, "Creating web-based laboratories", Advanced Information and Knowledge Processing, Springer, 2004.