AN INTEGRATED PLATFORM, IMPLEMENTING REAL, REMOTE LAB-EXPERIMENTS FOR ELECTRICAL ENGINEERING COURSES

Dimitris Karadimas [1], Kostas Efstathiou [2]
[1] Ph.D. Student, [2] Lecturer
[1,2] Dept. of Electrical and Computer Engineering, University Campus, Rion, Patras
Greece
{karadimas, efstathiou}@apel.ee.upatras.gr

ABSTRACT
Nowadays, the design of a remote, real instrumentation and measurement laboratory requires flexible hardware platforms. This paper describes an Internet-based laboratory, named Remote Monitored and Controlled Laboratory (RMCLab) developed at University of Patras, Greece, for electrical engineering experiments. The key feature of this remote laboratory is the utilization of real experiments, in terms of instrumentation and under-measurement circuits, rather than simulation or virtual reality environment. RMCLab's hardware infrastructure contains multiple reconfigurable sub-systems (FPGAs), which can be enhanced by almost any analog expansion module. The main characteristics of this system include the versatility of the hardware resources, due to the dynamic reconfiguration potentiality and the low cost of the hardware components. Moreover, this system enables its users to test, in real time, their own custom circuit designs. The paper concludes with a specific example regarding an elementary circuit in digital electronics and a short statistical review of the RMCLab educational usage. RMCLab can be accessed via the web through http://www.apel.ee.upatras.gr/rmclab.

KEY WORDS
Client-server architecture, remote laboratory, distributed instrumentation and resources

1. Introduction

The rapid progress of internet and computer technology along with its increasing popularity enables the development of remote laboratories, where the experiments can be remotely accessed, monitored and controlled [1]-[2]. This new interpretation of the measurement process offers to anyone the opportunity to interact with the laboratory at any time, reducing at the same time the experiment cost per user and extending the capabilities of the entire experimental framework.

Moreover, remote laboratories can offer high-level experimental training and experience, when they are able to realize, support and interact with real experiments, rather than present simulation results or simple depiction of reality. Additionally, expensive, often dedicated experiments, of modern, cut-edge technology can be shared worldwide, contributing thus to a high-valued remote laboratory framework [3]-[4].

There can be found many internet-enabled software systems that afford distance laboratories via simulated, virtual environments [6]-[7]. These software systems often integrate many of the desired functionalities, especially from the user's side, such as accompaniments to the experiment documentation, communication support and collaboration among their users. Despite the fact that modern simulators can accurately estimate circuits' performance, the employment and utilization of real circuits and real instrumentation, for electrical engineering laboratories, ensures the measurements' reliability, while at the same time increases the educative value of the remote laboratory.

This paper presents the specifications and the basic structure of an integrated remote laboratory platform that enables the instant remote access to real experiments, employing real hardware and real instrumentation. This platform, named Remote Monitored and Controlled Laboratory (RMCLab), is able to provide high-level services to a great number of users for a wide-range of real electrical engineering experiments; either pre-configured, reconfigurable or customizable, at a very low hardware infrastructure cost. RMCLab is already in use since March 2004, at the Dept. of Electrical and Computer Engineering of University of Patras, Greece, where it was developed and implemented.

2. Proposed Approach

The basic purpose of the developed platform is to provide high-quality lab-training in electrical engineering subjects to a wide range of users. The design of such a remote laboratory for real-time, internet-based experiments, should consider all aspects of the system, including communication and data flow, as well as instrumentation and hardware control [8]-[9]. The RMCLab system has

been designed so as to integrate all potentials of a physical laboratory to a simple user interface, among with other sub-systems, such as lab-administration, instrument operation and hardware management.

The primary service that RMCLab platform should provide to its users is the possibility to study on the experiment subjects, by accomplishing their measurements at any time and anywhere. For this reason, RMCLab's basic specification is defined as the ability to serve at any time, simultaneously and at real time, any potential user. On the other hand, an integrated remote laboratory platform should reinforce lab-administrator's faculties, regarding the experiment setup, hardware and instrumentation control, users' management and also lab-maintenance. RMCLab offers also many kinds of assessment functionalities for the lab-experiments, such as the assignment of several different evaluation criteria (measurements, instrument settings and multi-type questions), so as the whole platform can be configured as an advanced tool for high-level educational services, an aspect that characterizes our usage case and also the initial motivation.

3. Architecture

The RMCLab system has been developed based on the conventional client-server architecture, expanded in the server side, as depicted in Fig. 1, and consists of the following basic entities: client, instructor client (IC), application server (AS), resource server (RS) and lab-infrastructure, including the real instrumentation and all the hardware modules.

3.1 Network Topology

The server-side of the proposed architecture employs at least two sub-servers; the resource server and the application server, which can also be replicated in a more complex network topology. Resource server manages and operates hardware and instrumentation resources, providing to application server an abstract layer for communication that enables access to lab-infrastructure.

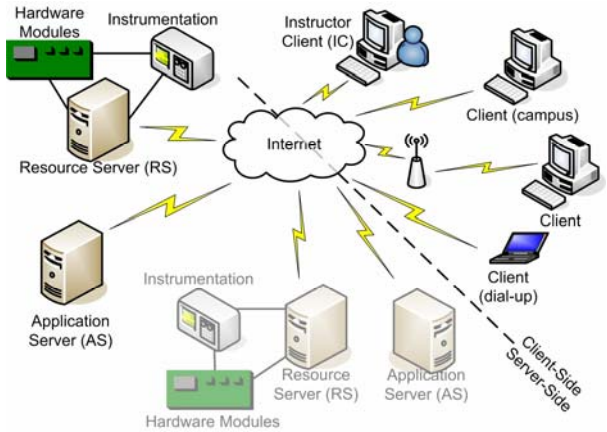

Fig. 1. RMCLab system overview.

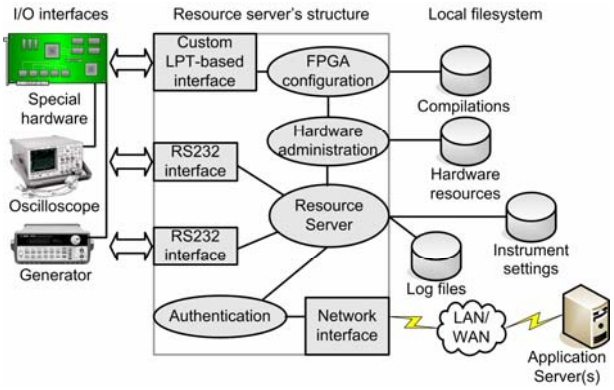

Fig. 2. Hardware, instrumentation and resource server's software modules.

Application server undertakes the data-flow control task between clients and the physical remote laboratory, realized by the resource server and the lab-instrumentation, since clients are not able to directly communicate with any of the resource servers. The communication between application server(s) and the resource server(s) or the client(s) is based on a custom, abstract language that integrates all potential tasks of a conventional, physical laboratory, while however it can be modified according to future or different requirements.

This topology simplifies the architecture of the server-side and expands platform's capabilities, as it facilitates the robust development and customization of a resource server. Moreover, it enables many application servers to utilize the components shared by the resource server(s), and as a result, a wide range of users are able to transparently access, via the application server(s), these shared resources. Additionally, application server grants to its clients transparently access to the physical resources of the physical laboratory, thus increasing system's robustness, flexibility and expandability.

3.2 Hardware, Instrumentation and Resource Server

The real measurement laboratory is based on a low-cost and easy implementation, while it is realized around the resource server. Resource server is equipped with suitable, interfaces toward the signals of lab-experiments (both digital and analog experiments), via a custom, LPT-based bus, and the instruments, via the RS232 interface, as depicted in Fig. 2. Standard or other commercial interfaces, like PCI, USB, etc, may be also supported by the resource server.

Multiple types (standard, programmable, pre-configured or re-configurable) of analog, digital or mixed circuits can be hosted in the platform's resource server(s). For this reason RMCLab's hardware if outfitted with a motherboard that is able to host up to 64-cards, where each of them is incorporated with an FPGA and extra auxiliary circuitry required for the lab-circuits, as depicted in Fig. 3.

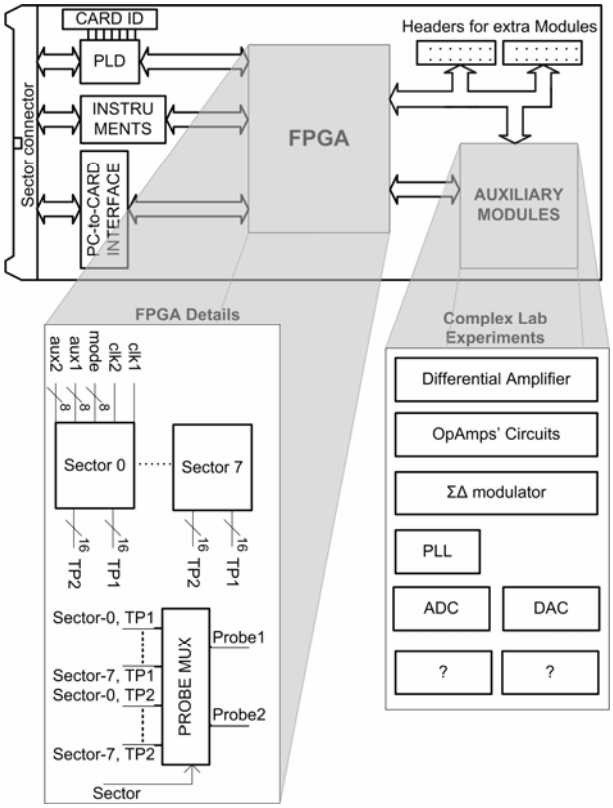

Fig. 3. Hardware, instrumentation and resource server's software modules.

Each card employs also a PLD, which is responsible for the card addressing and the configuration of the FPGA. Each of these cards can host 8-different analog, digital or mixed independent arbitrary circuits, since the FPGA is segmented into 8-sectors, each of them corresponding to a specific lab-experiment. The internal operation of the FPGA is controlled by a register file (Table II) which is employed within it.

As each sector of the FPGA can host either a specific multi-mode lab-experiment or a user's custom circuit, the mode register and two auxiliary registers control its operation mode and behavior. For example, a single sector could implement both synchronous and asynchronous counters, being realized as two different lab-experiments, while the selection is performed by the value of the mode register. Sector register points to the active sector, on which measurements are performed. Finally, when a measurement is carried out, two more registers, Probe1 and Probe2, assign the active nodes of the active sector, on which the two probes of the oscilloscope become physically connected through cross-point switches. Moreover, each card may be offline equipped with

Name	Address	Width (bits)	Operation
Sector	0	3	Select the active sector
Probe1	1	4-6	Select the active nodes of Oscilloscope's Ch-A
Probe2	2	4-6	Select the active nodes of Oscilloscope's Ch-B
Aux1	3	8	Auxiliary register 1
Aux2	4	8	Auxiliary register 2
Mode	5	8	Sector's operation mode

Table I.FPGA register file.

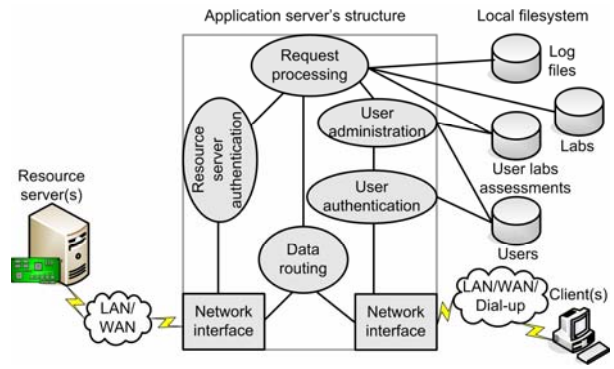

Fig. 4. Software modules of the application server.

additional on-board or external circuitry, in order to implement a wide range of more complex electronic circuits, including PLL, D/A or A/D, ΣΔ Modulators, etc.

When a client raises a measurement request, application server logs and routes this request to the proper resource server, which is able to support the under-measurement circuit. Afterwards, resource server has to accomplish multiple tasks, such as the authentication of the request and the lab-infrastructure (hardware and instrumentation) setup, so as to be prepared for the requested operations. A hardware administration module, within the resource server, is responsible for the aforementioned task, giving first priority to the completion of the request. This may lead to a real-time, online re-configuration of one's card FPGA, so as to implement the requested circuit, or even to the removal of an unutilized sector's circuit. As soon as the hardware is configured, the measurement is performed and the acquired data are transmitted back to the specific client, again via the application server. The above procedure has been designed so as to time-share the physical resources, in a FIFO priority, to all available requests.

3.3 Application server

Apart from the dataflow control and the routing procedure between client(s) and the resource server(s), application server is also responsible for the authentication and logging, as well as for the assessment and evaluation of its clients' actions, if educative usage is intended. The above presented characteristics and functionalities of the application server define its architecture, as depicted in Fig. 4. Additionally, each one of the application servers of the RMCLab platform needs to be offline aware of the resource servers, that are able to communicate with, and their list of supported circuits, which are dynamically acquired upon each successful transaction with one of the resource servers.

3.4 Client and Instructor Client

The client part of RMCLab's system has been designed so as to meet the requirements provided by the server-side. Thus, client embeds a specific interface, named as scenario interface, for supporting the remote monitor and

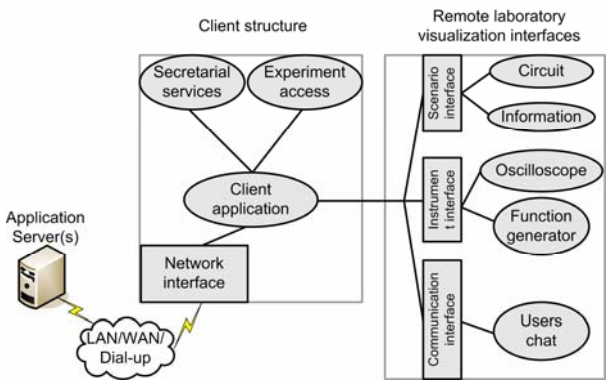

Fig. 5. Software modules of the client.

control of lab-infrastructure, and other full-functional and user friendly interfaces for lab-instrumentation (function generator, oscilloscope, frequency analyzer), as depicted in Fig. 5.

In more details, scenario interface provides a user with graphic information, related with the under study circuit. Additionally, grants to the user the control of circuit parameters (variable pots, caps, etc) and also the monitoring of any active node of the circuit, by selecting and setting the probes of the oscilloscope and the function generator on the circuit. Moreover, extra documentation, regarding the technical and theoretical aspects of the experiment, which can also be separated into multiple steps, can be presented to the user, via the scenario interface.

Finally, RMCLab's platform embeds an identical to the user's one client module, named as instructor client, which offers to a supervisor/instructor of the experiment the ability to replicate, monitor and control any online user's lab-environment. This feature is focused on the educational aspect of RMCLab platform, as it provides an instructor with the potentiality to observe closely and tutor efficiently the actions of any online users, concluding to a 'near-to-real' lab environment.

4. Advanced Properties of the RMCLab

The most important benefit of the RMCLab's system is that it provides its users with the feasibility to design their own custom circuits and test/measure them under real hardware and real instrumentation. RMCLab users can offline design almost any circuit using a separate software package (MAX+plus II or Quartus, both offered at no-cost for academic institutes from Altera). Using one of the aforementioned specific software packages, one can design his circuits following a reduced set of rules and confirm by simulation its proper operation. Once the design is verified at the client-side, it can be easily uploaded to the server-side and after a while (<15-seconds) he will be able to perform any measurement on his custom design, which is now implemented on real hardware, by employing real instrumentation.

The network architecture of RMCLab platform enables the world-wide distribution of resources, in terms of lab-experiments, by utilizing multiple application servers in a single network topology. Thus, instructors all over the world can take the advantages of employing a running lab-experiment and present it in their native language and personal point of view. Obviously, each supervisor has the opportunity to review his users' performance by his own criteria, according to the assessments rules for each experiment, that are defined in the RMCLab's application server, which is available and accessed by the supervisor, as resource server transparently executes the measurement requests.

RMCLab's advanced utilization modes are not limited within the above example. The real-time use of real hardware and real instrumentation can significantly contribute to the educational procedure, since it enables an instructor to prepare 'Active Lessons' and present in details, during a class, the operation of a circuit or a system under real world circumstances, while at the same time can be utilized as a mean of demonstration for expensive products.

5. The Realized RMCLab System

5.1 Technical Characteristics

The architecture described in section 3 has been implemented at the University of Patras, Greece. Current configuration is a cost effective implementation, which consists of a single PC, with a Celeron 2.4GHz processor and 394MB RAM, for both the resource and the application server of our running RMCLab system. This PC, running Windows 2000 Server, is permanently connected to the campus LAN and also to an Agilent 54622D mixed signal oscilloscope and an Agilent 33120A function generator, both controlled via RS232 @ 57600 and 19.2 baud-rate, respectively. The PC-interface with the hardware modules is implemented based on a custom, low-cost bus, through LPT in EPP mode. Each card of the hardware infrastructure contains an Altera FPGA of the FLEX8K series and also other components required for the implementation of the experimental circuits. The aforementioned infrastructure provides fast enough access and response (<5-secs per measurement) to the client requests, as summarized in Table II.

5.2 A Simple Educational Paradigm

Fig. 6 illustrates the measurement result, regarding the CLK and LOAD signals of an Early Decoding, Count Down, 4-bit Decimal Counter. The top part in Fig. 6

Property	Average Delay (sec)
Hardware setup and measurement time	3
Compilation time of a custom	10
Hardware re-configuration time	5
Measurement delay from client side using PSTN line @56kbps	<5

Table II.RMCLab time response characterictics.

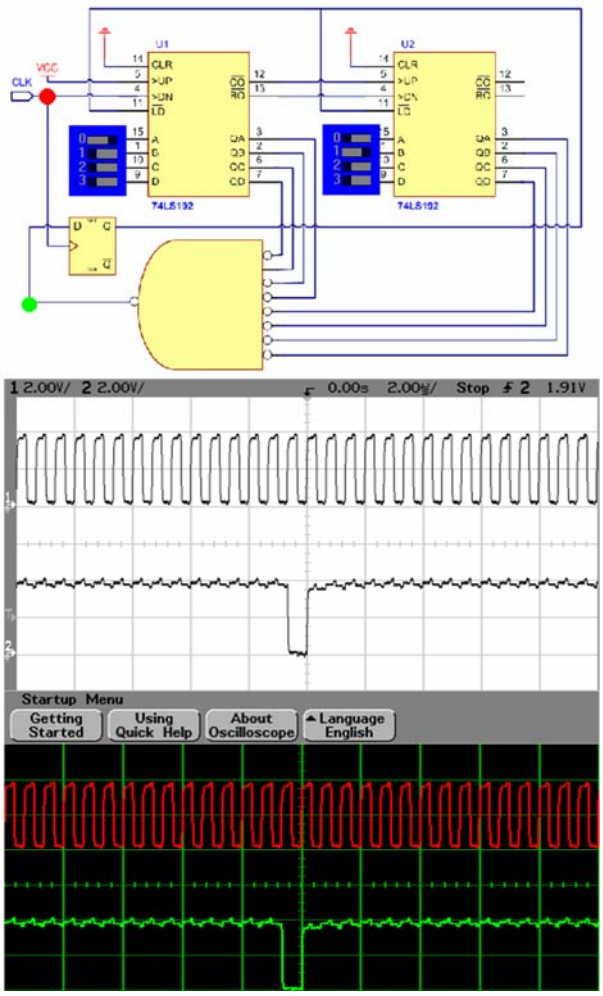

Fig. 6. Educational paradigm of RMCLab usage.

depicts the circuit information available to RMCLab users for the specific circuit, while the middle and bottom part depict the measurement representation of the real oscilloscope and the remote interface, respectively. Obviously, RMCLab system is able to take full advantages of the real hardware and real instrumentation utilization, providing measurements, regarding a wide variety of signals' properties, and the full control of both instruments (oscilloscope and function generator).

5.3 Educational Utilization

RMCLab system provides its educational services since March 2004 for the Dept. of Electrical and Computer Engineering of University of Patras, Greece, supporting classes of approximately 300-students, in two core-lessons, regarding Analog and Digital Electronics. Analog lab-experiments include 2-stage, feedback and cascade/folded-cascade amplifiers, whereas digital experiments include oscillators, multi-vibrators and a wide variety of counters, adders and accumulators.

A class of the Dept. of Electrical and Computer Engineering of our University has about 300-students. Students are grouped in teams of 3-to-4 persons per team,

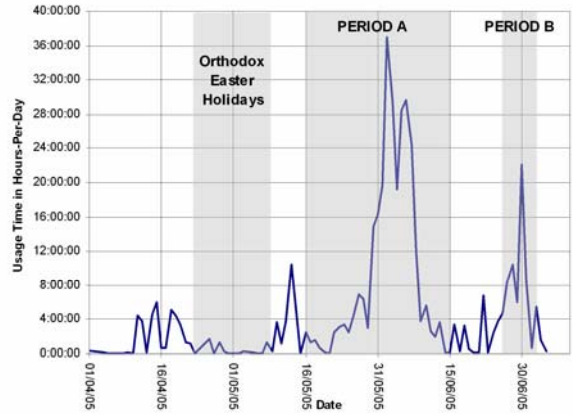

Fig. 7. RMCLab's cumulative utilization during the second semester of academic year 2004-'05.

in order to perform 6-obligatory lab-experiments per semester. For convenience, the same grouping was retained for accessing RMCLab services. Thus, for the second semester of academic year 2004-'05, RMCLab has to offer its services to 80-teams, for 2-obligatory lab-experiments. Four more obligatory lab-experiments had also to be carried out in the conventional way. The two RMCLab-based experiments referred to binary/decimal synchronous counters and special purpose programmable up/down counters, using the 74192 chip.

Students' obligations regarding the RMCLab-based experiments were announced at the beginning of April '05. As depicted in Fig. 7, they had to carry out these experiments in PERIOD A, while the re-examination took place in PERIOD B. It should be noticed that 6-teams did not fulfill their obligations to these labs.

During the same academic semester, RMCLab has been extensively employed for its services; thus 17200-measurements were logged on the platform's instrumentation, where 1666 of them regarded an introductory exercise, and 4458, 11076 measurements regarded the first and the second obligatory exercise, respectively. For the first obligatory exercise the performed measurements were 4.35-times more than the

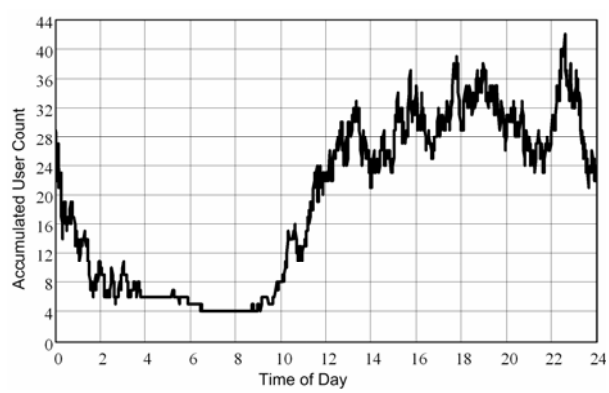

Fig. 8. RMCLab's cumulative user count vs. time of the day for the second semester of academic year 2004-'05.

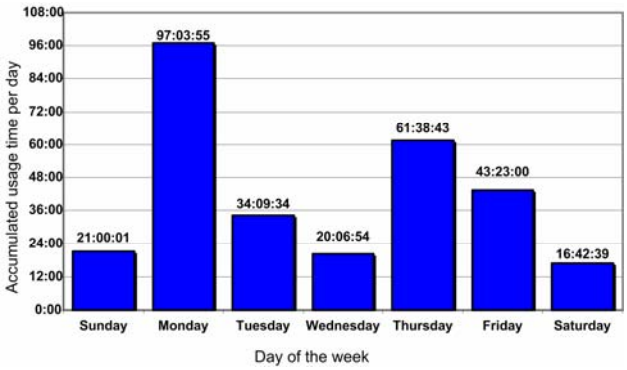

Fig. 9. RMCLab's cumulative usage time vs. day of the week for the second semester of academic year 2004-'05.

total number required for completing the exercise, while for the second one this ratio was reduced to 3.97, despite the fact that this exercise was significantly more demanding for the students. Students employed these oscillographs in their two lab-reports, which were of 25 and 55-pages in average, respectively.

During the same period, up-to 8-simultaneous requests have been raised to the RMCLab resource server, without importing any extra delay to the users' requests servicing. The 74-active teams fulfilled their lab obligations in 383h 30m 20s, thus, approximately 2.6-hours per lab-experiment. Fig. 8 and Fig. 9 depict the cumulative user count and the cumulative usage time of the RMCLab services versus the time of the day and the day of the week, respectively, for the aforementioned period.

Commenting on the statistics, derived by the use of RMCLab services, it can be pointed out that students have to acquire 4-measurements in average, in order to obtain the desired results; concluding that they are not experienced enough with the instrumentation and the RMCLab client application. On the other hand, RMCLab makes possible the easy, instant acquisition of multiple measurements. Finally, Fig. 8 and Fig. 9 prove that services like RMCLab enable students to take over their obligations in a reasonable time while exploiting efficiently their wide spread working hours.

6. Conclusion

The structure of RMCLab enables distribution of hardware and instrumentation resources, moreover makes possible the extensive exploitation of expensive lab-infrastructure, facilitating the wide spread of remote, real lab-experiments, which are indisputably valuable for engineers' education. Additionally, hardware re-configurability enables the remote implementation and measurement of electronic circuits, providing yet a high-valued educational service, while at the same time affects significantly students' psychological mood regarding the level of the offered education by their institute.

The intensive usage of the RMCLab system, during 5-academical semesters, for the courses of Analog and Digital Integrated Electronics, consisting of classes of about 300-students, has definitely proved the high value, for the students and for the instructors as well, of this educational tool, placing the proposed platform in a high position among related platforms, in terms of exploitation, capabilities and service quality.

It is anticipated that the proposed architecture guidelines along with the success of the RMCLab platform will motivate educational community to co operate, so as to develop an integrated World-Wide-Lab environment.

Acknowledgements

Authors would like to thank Prof. G.D. Papadopoulos, S.A. Koubias and N.M.Avouris for their useful suggestions and their support to the promotion of the RMCLab platform. Development of several lab-experiments was supported by the Third Framework of E.P.E.A.E.K. II.

References

[1] G. Mason, A handheld data acquisition system for use in an undergraduate data acquisition course, *IEEE Trans. on Education, 45*(4), 2002, 388-393.

[2] J. Sebastian, D. Garcia & F. Sanchez, Remote-access education based on image acquisition and processing through the internet, *IEEE Trans. on Education, 46*(1), 2003, 142-148.

[3] P. Lin & M. Lin, Design and implementation of an internet-based virtual lab system for eLearning support, *Proc. 5th IEEE International Conf. on Advanced Learning Technologies*, Kaohsiung, Taiwan, 2005, 295-296.

[4] A. Bagnasco & A. Scapolla, A grid of remote laboratory for teaching electronics, *2nd International LeGE-WG Workshop on e-Learning and Grid Technologies: a fundamental challenge for Europe*, Paris, 2003.

[5] F. Pianegiani, D. Macii & P. Carbone, An open distributed measurement system based on an abstract client-server architecture, *IEEE Trans. on Instr. and Meas., 52*(3), 2003, 686-692.

[6] J. Palop & M. Teruel, Virtual work bench for electronic instrumentation teaching, *IEEE Trans. on Education, 43*(1), 2000, pp. 15-18.

[7] C. Daly & J. Horgan, An automated learning system for java programming, *IEEE Trans. on Education, 47*(1), 2004, 10-17.

[8] T. Fjeldly & M. Shur, *Lab on the web: Running real electronics experiments via the internet* (Wiley-IEEE Press, 2003).

[9] C. Ko, B. Chen & J. Chen, *Creating web-based laboratories* (Advanced Information and Knowledge Processing, Springer, 2004).