Collaborative B2B e-Commerce Utilizing Semantic Web-Services and Smart Agents

J. Gialelis1,2, D. Karadimas1,2, P. Chondros1,2, D. Serpanos1,2
[1] Industrial Systems Institute/RC Athena
Patras Scientific Park Building
Stadiou St., GR-26504 Platani Patras, Greece
{gialelis, pchondros, karadimas, serpanos}@isi.gr

[2] Dept. of Electrical and Computer Engineering
University of Patras, GR-26504 Patras, Greece

Abstract

Collaborative B2B e-commerce provides enterprises with the necessary level of flexibility and efficiency in order to retain competitiveness under the increasingly turbulent business environment. Web-Services are often utilized by enterprises in order to integrate high and low level enterprise applications, thus providing a collaborative B2B e-commerce environment without affecting inter- and intra-enterprise processes. Nevertheless, the above paradigm should be enhanced in order to comply with demanding B2B e-commerce environments, such as the oil/gas domain, where restricted specifications should be met. This paper presents an integrated approach towards collaborative B2B e-commerce for demanding industrial domains, in terms of precision and reliability, enriched with smart agents for on-demand dynamic adaptation of existing Web-Services. The proposed approach utilizes the RosettaNet emerging standard, in combination with Service Oriented Architecture and semantically enriched information in order to seamlessly integrate the inter and intra-enterprise processes. Finally, the proposed approach is presented as a study case in the oil/gas industry domain.

1. Introduction

Economic pressure and turbulences in the global business environment introduce more and more demands for manufacturing enterprises in order to make predictable long-term provisions, as these factors impose radically changes in the way that enterprises operate with other enterprises in order to accomplish a business goal. In this context, Business-to-Business electronic transactions (B2B e-commerce) outfit the enterprises with the necessary tools for real-time interaction with their suppliers, dealers and customers. As a result, competition among businesses turns gradually from an enterprise-to-enterprise matter to a value chain-to-value chain one.

E-Business frameworks represent the state of the art in e-commerce; since framework-based B2B e-commerce effectively addresses the seamless linking of inter-enterprise (public) processes involving Enterprise layer's applications to those of business partners. These frameworks provide the necessary layers to achieve interoperability in e-commerce, since their interactions involve various business processes and business components, such as executable applications, systems, and their associated information [1].

In order to support the interchange of information among "public" modules, several standards and languages have been developed. EDI (Electronic Data Interchange), EDIINT (EDI over the Internet), ebXML (e-business eXtended Markup Language) and BizTalk are some generic standards addressing vertical as well as horizontal integration issues. Furthermore, standards such as RosettaNet, IOTP (Internet Open Trading Protocol), ICE (Information and Content Exchange) and OBI (Open Buying on the Internet) deal more with vertical market-oriented integration issues.

However, current framework-based developments consider inter-enterprise processes, involving only Enterprise layer applications, information, etc; without taking into consideration the intra-enterprise processes involving applications, information residing into the other enterprise layers such as Plant and Shop Floor layers thus, not assuring agility, flexibility and autonomy of the interacting partners [2].

The work presented in this paper is focused in the demanding and critical industry domain of oil/gas and intents not only to overcome the aforementioned drawback but also to enhance existing framework architectures with smart agents for on-demand, dynamic adaptation of existing Web-Services, thus managing to incorporate critical industry-related requirements, i.e. precision and reliability, within the B2B framework. Additionally, the proposed architecture extends the functionality of current frameworks in order to incorporate all enterprise layers into B2B e-commerce interactions, thus elevating an innovative collaborative business model which seamlessly integrates the inter-enterprise (public) with the intra-enterprise (private) processes.

The paper is organized as follows: Sections 2 and 3 describes the collaborative B2B e commerce and the Semantic Web-Services and Smart Agents, respectively, while Sections 4 and 5 describe the proposed set of technologies imposed over the e business frameworks' holistic architecture and the implementation of a collaborative B2B e-commerce business model for the oil/gas industry, according to the proposed approach.

2 Collaborative B2B e-commerce

Collaborative B2B e-commerce differs from basic B2B e-commerce, since collaborative commerce goes beyond on-line document exchanges, indicating that organizations adopt B2B networks to establish new collaboration mechanisms with channel partners. Thus, enterprises should establish collaborative B2B processes with cooperating manufacturing enterprises, in order to optimize exploitation and gain the most out of the adoption of electronic commerce networks. Collaborative B2B processes are considered to be any end-to-end business processes, which results from the seamless integration of intra-enterprise processes with inter-enterprise processes.

A designated example of a collaborative B2B process is the Continuous Replenishment Planning (CRP) model, which can constitute the base for the development of one of the most efficient inventory management function. The key characteristics of CRP are the sharing of real time inventory data by retailers with manufacturers and continuous replenishment of retailers' inventory by manufacturers. This function, called continuous replenishment planning, is defined as the practice of partnering between distribution channel members that changes the traditional replenishment process from a warehouse/distributor centric process handling purchase orders, to an end-user/retailer centric replenishment process involving the manufacturing enterprise in the overall process utilizing actual and forecast data.

Even though, the CRP collaboration model has the potential to alter significantly production-scheduling methods and inventory management practices, so that enterprises enjoy the above-mentioned benefits, survey results do not keep up with these expectations [3]. This drawback is caused, mainly, due to CRP deployment methodologies. Such methodologies are based on point-to-point architectures and on the utilization of proprietary solutions/technologies which present very limited tolerance to system/applications alterations and minimum scalability to value-network expansion. In order to overcome these drawbacks and achieve both integration of heterogeneous systems/applications, at any layer in the enterprises they may reside in and unlimited expansion of the value-network, this paper proposes the deployment of specific set of technologies over ERP (Enterprise Resource Planning), MESS (Manufacturing Execution SystemS), SCADA (Supervisory Control And Data Acquisition) and OPC (OLE for Process Control) systems, as depicted in Fig. 1. These technologies are based on Internet ubiquity and emerging standards.

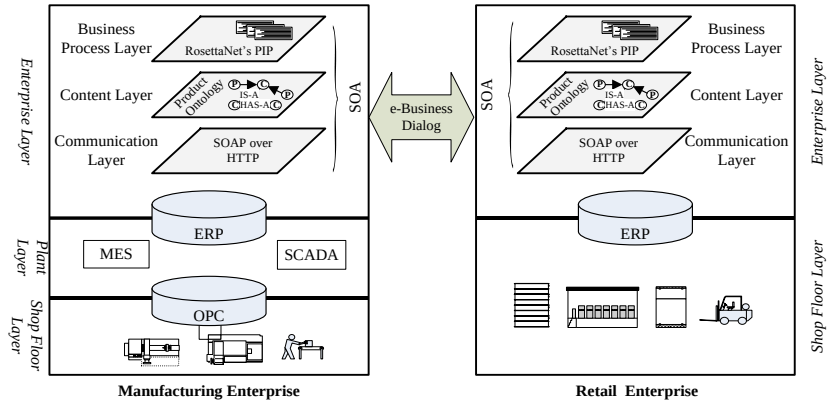

Fig. 1. e-Business framework's holistic architecture.

Therefore, Service oriented Architecture (SoA) elements, RosettaNet's ontology and standard processes for the B2B transactions are utilized, in order to fully implement the CRP collaboration model. Moreover, SOAP is utilized as the transport message protocol in order to satisfy communication needs, while ontology is used in order to standardize content semantics and WSDL (Web Service Description Language) is used in order to expose systems' functionality as Web Services. The above mentioned principles of the e-business frameworks' holistic architecture, for a manufacturing and a retail enterprise are further described in the next section.

3 e-Business Framework and Components' Technologies

Several contemporary B2B interaction frameworks are based on the XML notation. They aim at overcoming some of the limitations of traditional electronic data interchange standards. XML-based frameworks for B2B transactions follow a hierarchical model, which comprises three layers: the Communication, the Content and the Business Process layer [4]. The Communication layer provides the appropriate means of communication for exchanging the required messages among the involved systems/applications, while the Content layer provides the necessary tools (languages and conceptual models) so that the involved entities agree upon the semantics of contents and

the types of the exchanged documents. Finally, the Business Process layer is concerned with the conversational interactions among services. The following three sub-sections present the proposed imposed technology solutions for the three aforementioned layers.

3.1 Communication Layer

For the communication needs, the SOA paradigm is utilized by employing the use of Web-Services technology in order to open up enterprise systems, plant systems and production systems; thus making available their functionalities. Therefore, the Simple Object Access Protocol (SOAP) and the Web-Services Description Language (WSDL) are deployed at the communication layer.

3.2 Content Layer

The content layer provides the suitable means to describe and organize exchanged information in such a way that it can be understood and used by all the collaborating partners. Content interactions require that the involved systems understand document content semantic. Our work is based upon the development of elaborated petroleum product ontology in order to achieve a uniform product terminology. Furthermore, existing work in different standards, such as RosettaNet Technical Dictionary (RNTD), is utilized wherever required.

3.3 Business Process Layer

Our work, at this layer, emphasizes on the RosettaNet framework in order to address business process layer needs. RosettaNet focuses on three key areas of standardization to automate B2B interactions. First of all, the vocabulary needs to be aligned. Secondly, the business process governing the interchange of the Business Messages themselves must be harmonized and specified. Finally, the way in which Business Messages are wrapped and transported should also be specified.

Next section presents the principles of semantic Web-Services and also the mechanism to enhance the Web-Services –based e-Business dialog with the use of smart agents for the automatic synthesis of semantic information from both higher and lower enterprise layers, in order to provide an integrated e-Business framework compatible with the demanding requirements of reliability, security that appear in an enterprise within the oil/gas industry domain.

4 Semantic Web-Services and Smart Agents

Communication between Web-Services -based systems is done through the use of the SOAP and the Web Service Description Language (WSDL). WSDL specifies a way to describe the functionalities of Web-Services and how and where to invoke them. However, the WSDL W3C Recommendation does not include semantics in the definition of a Web-Service. Thus, two services can have similar description but different meaning, or they can have different descriptions but similar meaning. Resolving these ambiguities in Web-Service definitions is not only an important but also a necessary step toward automating the discovery, the composition and the deployment of Web-Services. Being able to discover, compose and deploy new Web-Services, based on existing Web-Services, will give a more dynamic, adaptive and accurate grid of services, able to be employed in critical environments.

Semantic tools provide capabilities for automatic discovery of topics and concepts. These tools may also extract the meaning of the information provided, categorize, correlate and map information from different sources. By using ontologies and semantic technologies it is possible to automatically discover and deploy semantic annotated Web-Services and employ their functionality. Moreover, semantic described Web-Services allow the automatic combination of services in order to create new services, and in this sense Web-Services will grow together with the data on the web. The sequence of Web-Service requests may be orchestrated, and then responses may be gathered together into composites that deliver a more comprehensive view of the web.

The aim is to automatically discover, connect to and deploy Web-Services. A client should be able to do semantic search for Web-Services and upon discovery automatically connect to and deploy the selected Web-Service(s). This automation requires that all the processes that can be performed by a Web-Service are described. Processes should then be categorized on the basis of what they do. To enable efficient Web-Service discovery, the services need to be registered somewhere, since the publication of their description on the service provider's home page is not adequate. Several solutions for Web-Service registry and discovery exist, like the Universal Description, Discovery and Integration specification (UDDI). These are primarily key-word based and human interaction is needed to discover and connect to a Web-Service. Therefore, the automatic discovery and deployment requires the use of a semantic search engine that describes Web-Services functionalities. Then, service providers could register their services at the search engine repository by adding the semantic description of their services, while clients could thereafter search for Web-Services by description, since the description of Web-Services is functional-based, providing a semantic description of the operations performed by the service.

To fulfill more advanced tasks for an industrial environment a matching engine is needed. This engine must provide discovery, negotiation, filtering, choreography and reasoning, based on the population of the descriptions of different services; which services perform which operations, what are the expected inputs, outputs, preconditions and effects. Thus, three essential types of knowledge about a Web-Service needed to be provided: what the service does/provides, how it is used/works and how to interact with it.

The Web Ontology Language (OWL) descriptions, collected in a search engine, enable semantic search for operations and proper Web-Services to perform the desired operations. The semantic description enables queries for Web-Services based on their expected input and/or output, since all the concepts in the queries are related to ISO definitions. Based on the Web-Service descriptions, smart agents can reason over the descriptions and orchestrate new services. The use of Business Process Execution Language (BPEL) enables different parties to construct their own smart agents with reasoning abilities as desired.

The goal regarding a demanding industrial environment is to provide reliable and secure Web-Services. For the accomplishment of this task a smart agent as a matching engine should consider not only the public Web-Services, within a public UDDI registry, but also private/protected services exposed by the OPC layer of an enterprise. Thus, a smart agent takes over the composition of new services, based on information located both on high level layers, such as the ERP, and on low level layers, such as the OPC. The smart agent is not only sophisticated enough to reason over the descriptions of the services and orchestrate new services but also is capable to access low-level layers and incorporate their reliable and protected from public view information to the new services, thus providing reliable semantic Web-Services, without endanger the security of the low level information.

Fig. **2** depicts a generic example of the aforementioned functionality. For this example we assume three different semantic Web-Services A, B and C, where the first two are connected to the ERP layer and the third is connected to the OPC layer. Both services A and B could be public and registered within a public UDDI registry, while service C is private/protected since it exposes low level information. A smart agent is then capable of reasoning over more complex information, ABC in our example, acquired by an external enterprise, search for Web-Services that might provide this information, access the low level and protected service C, combine the information and return it, as illustrated in

Fig. **2**. After the smart agent is queried for an ABC information, interprets the ABC element and appreciates that it consists of several elements that can be acquired from several Web-Services. Smart agent can authenticate itself and gain access to the low level services, if required. Then, smart agent requests the information, collects it and responds to the query with an ABC element.

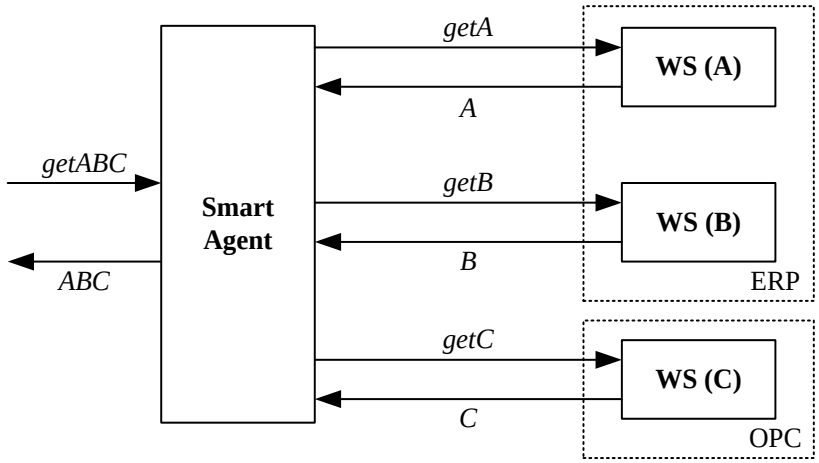

Fig. 2. Smart Agent – collect, organize and compose

The aforementioned mechanism provides semantic Web-Services with advanced functionality, high reliability and accuracy, since it enhances high level information with low level elements, without affecting the security and privacy of the low level enterprise layers. The deployment of this mechanism could enforce an industry enterprise to optimize its manufacturing production and forecast the production levels, which are both two of the most significant factors that influence the performance of enterprises within the oil/gas industry domain.

Next section describes in details an implementation example of a use case scenario of the proposed approach depicting a real world Continuous Replenishment Planning process application in the oil/gas industry which involves gas stations or other enterprises as end users/retailers and a refinery as the manufacturing enterprise.

5 B2B Framework Architecture for Oil/Gas Industry

The architecture presented in this section aims at the integration of high-level inter-enterprise (public) processes with the low-level intra-enterprise (private) processes by utilizing the mechanism of smart agents, described in the previous section. However, there are some key characteristics of such an online

system/framework: (a) ability to connect to any available ERP system of the enterprise in order to update product and pricing information, (b) ability to

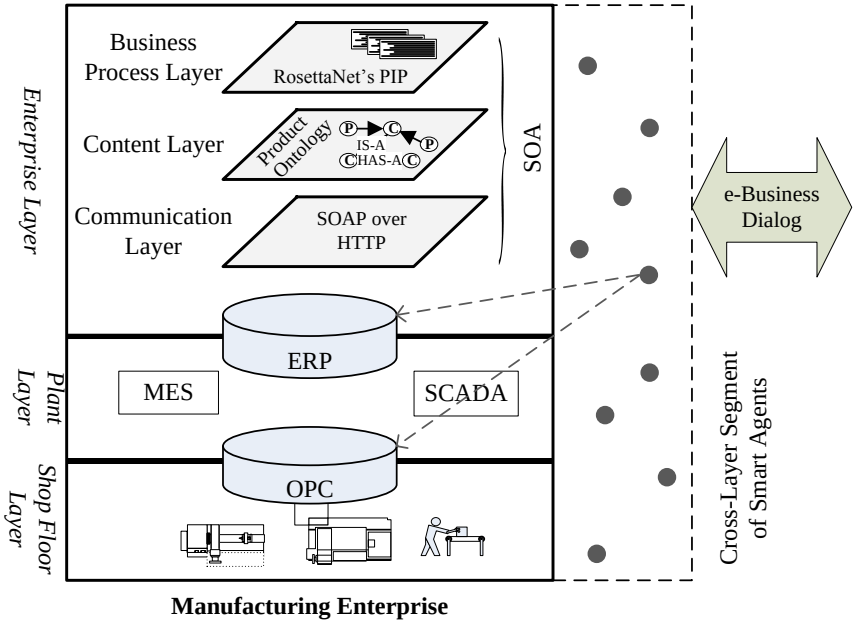

Fig. 3. Proposed B2B framework architecture.

support enterprises with different products and pricing policies and finally (c) ability to preserve privacy and security when accessing low-level information among with reliability and accuracy of the final provided semantically enriched information.

Fig. **3** illustrates the incorporation of the smart agent mechanism within the Manufacturing Enterprise layers, as presented in Section 3 and depicted in Fig. 1. Since the goal of the smart agents is to combine information from both higher and lower layers, so as to comprise reliable and accurate Web-Services, they have to be vertically expanded through the different enterprise layers, leading to vertical cross-layer segment. Smart agents provide the ability to securely access the sensitive lower layers and are also hereafter responsible for the e-Business dialog, occurring between Enterprises or between an Enterprise and its Customers, where the first mentioned case is the more demanding for the oil/gas industry.

5.1 Use Case Scenario

Oil/gas ordering and delivering is a demanding procedure, in terms of catching-up with the deadline dates, managing the paperwork and generally taking care of all the non-automated processes, inside an Enterprise, between a Manufacturing and a Retail Enterprise and finally between a Customer and an Enterprise. Thus, three entities have to be defined as follows: (a) the Customer/User which makes the order(s), (b) the Retail Enterprise (playing a distributor role) which collects the orders and has the duty to deliver the order to the customers and (c) the Manufacturing Enterprise (playing a supplier role) which supplies the distributor with the appropriate quantities of the ordered products. The proposed framework automates this end-to-end online ordering infrastructure, based on semantic Web-Services together with the smart agents' mechanism. Apparently, it is also able to keep track and provide, through Web-Services, the different order states during the whole process, which is of major significance for the logistics part regarding the specific use case.

An operational diagram of the implemented use case scenario is depicted in Fig. 4. The distributor enterprise exposes several Web-Services via a segment of smart agents that communicate with high and low layers within the enterprise. The aforementioned Web-Services are identifiable either by the UDDI protocol or with the use of OWL-S ontology for semantic Web-Services. Fig. 4 illustrates the functionality of the smart agent mechanism for composing Web-Services enriched with information acquired from both higher and lower layers of the enterprise.

Fig. 5 depicts a screenshot from the user interface of Distributor Enterprise Web-Service that presents the developed product ontology. Furthermore, the process terminology that has been employed accrues from RossettaNet technical dictionary.

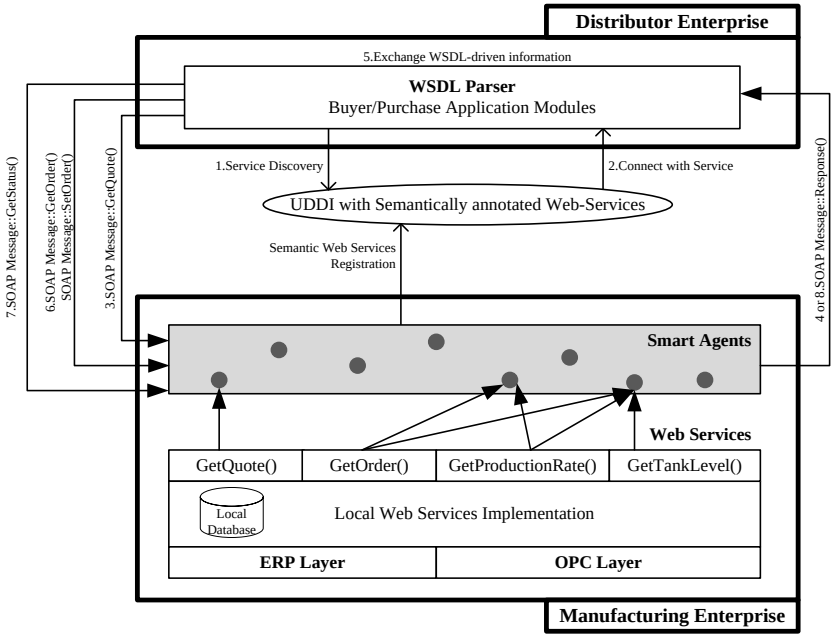

Fig. 4. Operational diagram of the implemented use case scenario.

Fig. 5. The developed product ontology for the specific use case scenario.

6 Conclusions

This paper presents an innovative approach towards collaborative B2B e-commerce by utilizing RosettaNet standard in combination with Service Oriented Architecture and semantically enriched information in order to seamlessly integrate the inter-enterprise (public) and intra-enterprise (private) processes. An implementation of a special case of collaborative B2B e-commerce namely Continuous Replenishment Planning process in the oil/gas industry is given as a use case scenario. Also, the proposed B2B framework architecture incorporates semantic Web-Services and a smart agent mechanism that is able to provide reliable and accurate information.

Although the proposed framework architecture has been initiated and also tested for the logistics automation between the entities of a Supplier Enterprise, a Manufacturing Enterprise and a Customer, it could be also applied for the end-to-end support of the oil/gas industry domain; i.e. from the oil-well to the oil/gas station, since it manages to provide semantically enriched low level information in a secure, reliable and accurate way.

The work presented in this paper has been partially supported by the General Secretariat for Research and Technology (GSRT) [5] of the Hellenic Ministry of Development under the framework “Competitiveness” through the project No68, Measure 4.3, Action 4.3.6.2g and Network of Excellence (NoE) Intermedia [6].

References

1. Simon S.Y. Shim, Vishnu S. Pendyala, Meera Sundaram, Jerry Z. Gao: Business-to-Business E-Commerce Frameworks. IEEE Computer, vol. 33, no.10, pp. 40--47, (October 2000)
2. Kim Tae-Young Kim, Sunjae Lee, Kwangsoo Kim, Cheol-Han Kim: A modeling framework for agile and interoperable virtual enterprises. Computers in Industry, vol. 57, issue 3, pp. 204--217. Elsevier Science Publishers (April 2006)
3. S. Lee et al.: Business Value of B2B Electronic Commerce. Electronic Commerce Research and Applications 2, pp. 350--361 (2003)
4. B. Medjahed et al.: Business-to-Business Interactions: issues and enabling technologies. The VLDB Journal 12, pp. 59--85 (2003)
5. General Secretariat for Research and Technology, http://www.gsrt.gr
6. European Project INTERMEDIA: Interactive Media with Personal Networked Devices, FP6–IST- 38419, http://intermedia.miralab.unige

John Gialelis received his B.S.E.E degree from Fairleigh Dickinson University, NJ, USA, his M.S.E.E degree from Polytechnic University, NY, USA and his Ph. D from the University of Patras, Greece. He is currently in the Department of Electrical and Computer Engineering at the University of Patras and a senior member of the Industrial Systems Institute. He has published over 40 papers in international journals and conference proceedings. His main research interests include enterprise integration, embedded systems in critical applications, B2B architectures.

Dimitris Karadimas received his B.Sc. in electrical and computer engineering from the University of Patras, Greece. He is currently a Ph. D candidate in the Department of Electrical and Computer Engineering at the University of Patras and a member of the Industrial Systems Institute. He has published over 10 papers in international journals and conference proceedings. His main research interests include embedded systems in critical applications and B2B architectures.

Petros Chondros received his B.Sc. in electrical and computer engineering from the University of Patras, Greece. He is currently a Ph. D candidate in the Department of Electrical and Computer Engineering at the University of Patras and a member of the Industrial Systems Institute. His main research interests include embedded systems in critical applications and B2B architectures.

Dimitrios Serpanos is the Director of ISI/RC Athena, Chairman of the Governing Board of the University of Western Greece and a Professor of Electrical and Computer Engineering at the University of Patras, Greece. He holds a PhD and an MA in Computer Science from Princeton University and a Diploma in Computer Engineering and Informatics from the University of Patras. Professor Serpanos works in the area of computer architecture with emphasis on embedded systems, network systems and security systems. He has published extensively in scientific journals and conferences and he has co-authored and co-edited several books in the above technical areas.