A Versatile Scalable Smart Waste-bin System based on Resource-limited Embedded Devices

A. Papalambrou, D. Karadimas, J. Gialelis, A. G. Voyiatzis
Industrial Systems Institute, "Athena" Research Innovation Center in Information, Communication and Knowledge Technologies
Patras Science Park, Stadiou Str., Platani, Patras, Greece
{papalambrou, karadimas, gialelis, bogart}@isi.gr

***Abstract*— This work presents the architecture, modelling, simulation, and physical implementation of a versatile, scalable system for use in common-type waste-bins that can perform and transmit accurate fill-level estimates while consuming minimal power and consisting of low-cost embedded components. The sensing units are based on ultrasonic sensors that provide ranging information which is translated to fill-level estimations based on extensive simulations in MATLAB and physical experiments. At the heart of the proposed implementation lies RFID technology with active RFID tags retrieving information and controlling the sensors and RFID readers receiving and interpreting information. Statistical processing of the simulation in combination with physical experiments and field tests verified that the system works accurately and efficiently with a tiny data-load fingerprint.**

Keywords—urban solid waste; ultrasonic sensors; waste-bin fill-level estimation; active RFID tag; smart-cities; sustainability

I. Introduction

Waste in general appears in many different forms such as agricultural, biomedical, chemical, electronic, mineral, organic/inorganic, radioactive, and urban/municipal; etc. All of the above waste forms, apart from urban, are characterized by specific collection points, uniform and predictable production, and equal, usually long, filling periods. Urban waste on the other hand involves numerous waste bins that exhibit significant filling variations (over time or location) and diverse requirements for emptying, from sporadic (a few times within a week) to very frequent (several times a day).

A poor or inappropriate urban waste collection may introduce or amplify problems affecting the urban environment, the authorities, or even the citizens. One of the major problem-raising source is the remote fill-level estimation, since such a waste management could potentially lead to great improvements and/or optimizations in the overall process, like: a) waste-bins' number, capacity and placement; b) garbage trucks' routes that could in turn lead to reductions in traffic congestion, noise levels, emissions, and operating costs; c) public image and general sense of duty for public sanitation.

In some cases, urban waste is separated, according to its source material, to respective waste bins types such as glass; books; textiles; oils or even silos. Despite that during the past years many commercial solutions [1], [2] have appeared dealing with the fill-level estimation of such waste bins containers, the fill-level estimation of solid-waste bins is a challenging task. The detection of the fill-level for solid-waste urban bins presents many difficulties due to the various irregularities of the bin filling process, such as the irregular shape and the variety of the included materials. Furthermore, the physical experimentation with this process is difficult as the number of experiments needed to reach safe statistical conclusions is very large. More challenges exist for the economical and energy efficient data aggregation from a large number of bins while the harsh environmental conditions (e.g., humidity, temperature, and dust) can significantly affect the sensor measurement accuracy and reliability. These challenges are being dealt within this work, which is part of the Dynacargo project [3].

The paper is organized as follows: Section II presents the scope of the Dynacargo project and revises existing approaches. Section III is dedicated to the description of the proposed architecture and its components while Sections IV and V demonstrate the modelling and statistical processing towards fill-level estimation, and the verification method followed along with power characteristics of the deployed system. Finally, the paper concludes with Sections VI and VII justifying the system's possibilities regarding scalability and future actions, respectively.

II. Overview of Dynacargo Project and Related Work

A. Overview of Dynacargo Project

Dynacargo is an ongoing research project that introduces a breakthrough approach for cargo management systems, as it places the hauled cargos in the center of a haulage information management system, instead of the vehicle. Dynacargo attempts to manage both distribution and collection processes, providing an integrated approach. In order for the Dynacargo project team to achieve their goal, a fill-level monitoring system is placed on waste-bins in order to produce crucial data that is fed via diverse communication channels into the cargo management system. Besides feeding the management system with raw data from waste bins, data mining techniques are used in order to predict current waste-bins fill-status and easy-to-use mobile and web applications will be developed to encourage citizens to participate and become active information producers and consumers.

The Dynacargo project overall aim is to develop a near real-time monitoring system that monitors and transmits waste-bins' fill-level, in order to dynamically manage the waste collection more efficiently by minimizing distances covered by refuse

978-1-4673-7929-8/15/$31.00 ©2015 IEEE

vehicles, relying on efficient routing algorithms, as described in [4].

In this work, we present the part of the Dyncargo project that is related to the waste-bin fill-level monitoring and data communication subsystem.

B. Related Work

Currently, several research approaches exist tackling issues related with waste collection and management and especially information collection at the point of waste disposal [5][3]-[11]. However, most of them are expensive in terms of total required equipment, while some of them deal with the problem of collecting only recyclable waste, which can be collected at less frequent intervals and have a more stable production frequency. Moreover, a few fill-level sensing prototypes and architectures can be found in the literature, which are shortly described hereby.

A prototype waste-bin system was constructed for the city of Pudong, Shangai, PR China [12] and in Malaysia [13]. These systems are very similar to each other since they both employ GPRS communication to send waste-bins images to a central server for processing and bin fill-level estimation. Another approach for waste-bin fill-level estimation can be realized with sensors based on a modulated infrared beam detected by a photodiode. As described in [14], multiple line-of-view sensors in parallel and a majority decision system can be used in order to count the times a waste-bin is opened or moved and finally correlate the result with the amount of waste inside the bin. Apart from the assumptions and simplifications in the above correlation, the accuracy of the measurement can be influenced by transparent objects, the reflection of light on object surfaces, the ambient light, and the dirt over emitter and detector surfaces.

The SEA project designed a smart bin prototype using an ultrasonic sensor and IDEA's ArgosD (TelosB) sensor nodes running a custom TinyOS application. The smart bin connects with gateways that are based on the New/Linux OS, realizing a three-layer architecture for information collection [15]. A similar architectural approach is followed in [16], where two sensors (an ultrasonic for fill-level and a load cell for weight) are used to transmit their sensed values to nearby gateways installed in light poles. A three-tier approach is followed also in [5], where multiple sensors are used in the lower tier: ultrasonic for fill level, load cell for weight, temperature and humidity, Hall Effect and accelerometer for detecting bin cover open events. The sensed values and operational parameters, such as bin identity, date, time, and battery power level, are collected and transmitted when a cover opening is sensed, thus achieving energy-efficient, real-time fill-level reporting.

The EU FP7 OUTSMART project designed a mesh wireless sensor network for Berlin, Germany [17] employing an ultrasonic sensor for fill-level estimation and a wireless sensor network based on IEEE 802.15.4 for connecting nodes with gateways through multiple short-range hops. The EU FP7 Future Cities project [18] developed an urban-scale living lab in the city of Porto in Portugal. In the context of the project, the Municipality of Porto has developed an innovative data collection system for monitoring fill-level of garbage containers.

The EU FP7 Straightsol project [19] streamlines charity collection (e.g., clothes and books) from donation banks installed in public spaces and retail shops by using an infrared sensor for fill-level estimation (at 20% reported accuracy) and transmitting the information twice per day through GSM for scheduling next day's collection. A small-scale actual pilot included 37 donation banks, 50 retail shops, and 5 vans and resulted in an estimated 5% revenue gain [20].

III. Smart Waste-Bin System Architecture

Our proposed smart waste-bin system is envisaged to be mounted on the top lid of a waste-bin and it consists of the sensing units, an active RFID (Radio-Frequency IDentification) tag for data aggregation and transmission, as well as a protective enclosure for the sensors, and the RFID tag that may optionally include an external battery source. On the other side, the waste-bin system interacts with an active RFID reader which could be optionally accompanied by a bare-bone-pc, i.e. a Raspberry Pi for enhanced capabilities. The aforementioned modules are described in the following paragraphs starting from the waste-bin which constitutes the main physical component and moving towards the receiver side.

A. Mobile Garbage Bin

The physical system is based on the standard type of a mobile garbage bin, also known as a "wheelie bin", used in the municipality of Nafpaktia, Greece, where the pilot of the Dyncargo project will take place. The bin has a main compartment whose internal dimensions are approximately 110x90x90 cm, consisting of slight curved-shaped walls. It has a lid-opening mechanism and is made of durable hard plastic, as depicted in Fig. 1. The lid of the bin was chosen as the point of placement of the sensors because the main compartment is subject to harsher conditions due to the presence of the waste as well as the washing procedure of the bins.

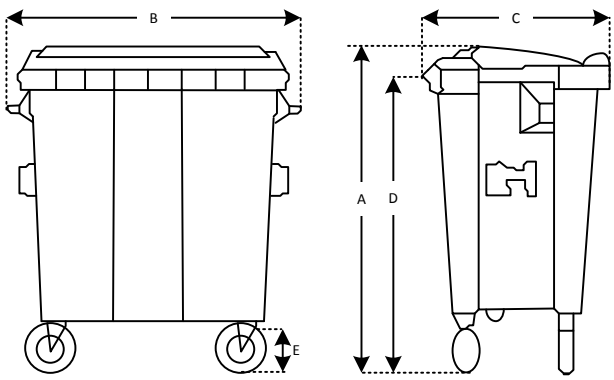

Volume (lt)		1148
Maximum Load (kg)		530
Total Height (mm)	A	1460
Total Width (mm)	B	1360
Total Depth (mm)	C	1050
Upper Edge Comb (mm)	D	1230
Wheel diameter (mm)	E	200

Fig. 1. The mobile garbage bin.

B. Sensing Unit

A literature-based comparison in research and industrial efforts of various solutions including infrared proximity sensors,

optical sensors and ultrasonic sensors, indicated that ultrasonic sensors are the most suitable solution for the purpose of the presented architecture taking into account the harsh environmental conditions (e.g., humidity, temperature, and dust) that can significantly affect the sensor measurement accuracy and reliability. The ultrasonic sensors are advantageous in providing ranging measurements independently of the contained objects, thus making possible the corresponding translation into fill level measurements. Moreover, ultrasonic sensors are most suitable to our application because they can be placed on the lid and thus avoid the harsh conditions (contact with waste, washing procedure etc.) of the main compartment. Finally, the chosen ultrasonic sensors can have a beam with a wide field of view and therefore the whole bin can be sensed with a limited number of sensors, thus reducing cabling and interconnection needs.

For the purpose of this task, the ultrasonic sensors of Maxbotix were selected which provide a variety of detection patterns, accuracy and durability. The wide selection of available detection patterns in the same family means that this setup can be expanded and modified for bins of various sizes. For the standard type of bin used in this pilot, the MB1040 LV-MaxSonar-EZ4 [21] was selected whose beam dimensions fit well with the depth and width of the bin as depicted in Fig. 2.

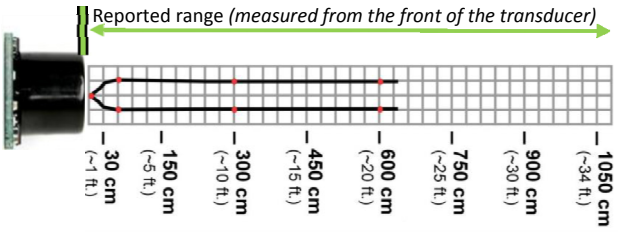

Fig. 2. MB1040 LV-MaxSonar-EZ4 beam characteristics drawn to a 1:95 scale.

Since the resolution of the ultrasonic sensors is only a few centimeters (about an inch), the selected solution can offer fine-grained accuracy for the purpose of the application. The ultrasonic sensors should be mounted in the bin lid, exposing only a small part of the sensor body. Since the sensors will operate unattended in the field, low power consumption models that also offer IP-67 protection rating can be used. An analog output is provided for the transmission of the measurements.

The measurement of the sensors essentially provide the distance to the nearest object of efficient size. Since waste in the form of irregular-shaped objects can occupy the bin space in various arrangements, there is typically some difference between the highest bin level and the actual fill percentage. Accuracy of the fill-level estimation can be increased by providing more sensing points which will decrease the influence of irregular arrangements as these will only be limited to the sensing area of each sensing point. Following experimentation with placement and number of sensors it was concluded that a single sensor placed in the center of the lid was providing good results but over-estimating the fill level due to the typically higher level of waste in the center of the bin. As a result, various combinations of two sensors were examined. It was concluded that more accurate results were provided by placement of two sensors in a way that their areas of detection would not overlap. This prevented problematic arrangements from affecting more than one sensor, increased the resolution of the measurement for each independent area and also simplified the task of estimating the fill level. Having two sensing points with independent areas of detection allows for the fill estimates of each area to be summed so as to provide the total fill estimate of the bin. The exact placement of the sensor is limited by the distance to the bin walls which must be outside the beam or they will provide a false detection. The exact number of sensors to be used depends on the size of the bin and the beam pattern of the sensors. Typically, using more narrow-beam sensors will increase resolution and accuracy while using fewer wide-beam sensors will reduce cost but increase measurement ambiguity. The final number of sensors for our application was based on compromising the above parameters with cost limitations.

C. *Active RFID Tag*

Active RFID tags have been selected as the data aggregation and transmission unit for the bin subsystem. The selected tags (ZT-50-mini Tag from TagSense [22]) can operate with standard 3V voltage input providing increased lifetime that equals to millions of beacon transmissions.

The employed active tags offer extra I/O pins for communicating with external devices (as depicted in Fig. 3), thus the ultrasonic sensing units. This setup allows powering the sensors and the RFID tag from the same source, either tag's battery or an external power source. The tag itself supports various operating modes, including standard beacons at programmable time intervals, sleep, wake up at regular intervals and also wake up at external trigger.

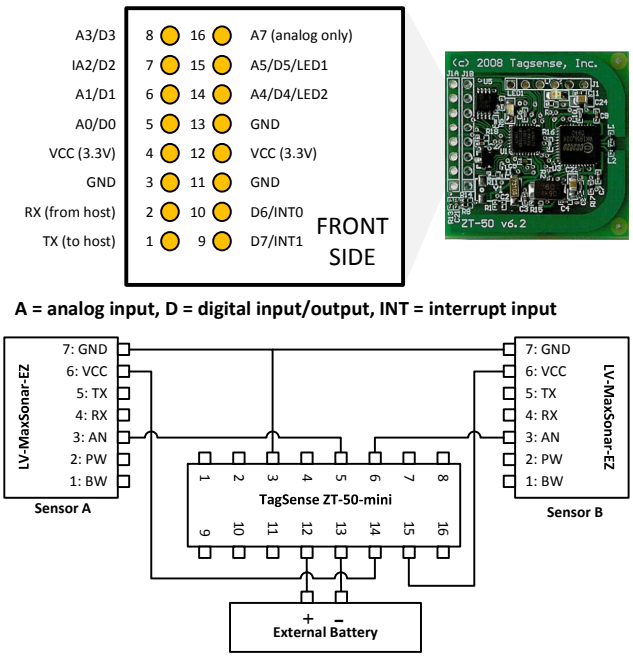

Fig. 3. ZT-50-mini photograph of the front side with a description of the 2-rows header connector and the circuit diagram of the hardware setup.

The combination of the above operating modes allows the extension of the entire bin subsystem's energy lifetime, since

minimal power consumption occurs when the tag operates in sleep mode and the sensor is not powered up. When the tag is awake, it powers up the sensors and temporarily stores their values in its internal memory.

In the Dynacargo scenarios, the tag wakes up at predefined times of the day, depending on the location of the waste bin installation and on the desired measurement frequency defined by the Municipality operators. The Dynacargo operation does not assume availability of a fixed network infrastructure that reaches all the installed bins. At a wide area scale of operation, this is a quite realistic assumption, since thousands of sensors are sparsely deployed in a complex city and suburban terrain. System installation and maintenance, ensuring radio coverage, and retaining network formation can become an unmanageable task. The Dynacargo project opts for low-range, point-to-point communications based on RFID technology so as to cope with these issues. Vehicles roaming around the city, equipped with readers, collect the information from the bins. In order to cope with the increased telecommunication costs and infrastructure upgrades, these mobile sinks defer transmissions until an Internet connection becomes available.

D. Active RFID Reader

The selected active RFID reader (ZR-USB RFID Reader from TagSence [22]) is inherently designed to communicate with the TagSense ZT-50 active tag. The ZR-USB active reader communicates with the active tags using a variable packet length protocol which is designed to conserve power on the tag. The air interface protocol layer is based on the underlying IEEE 802.15.4 industry standard, which is best-known as the physical layer for Zigbee. However, the full Zigbee protocol is not well-suited for most RFID applications since it contains a great deal of overhead and requires a larger program memory on the tag to support routing tables and multi-hop/mesh capability.

In order to support general RFID applications, and conserve power, the TagSense active RFID tags use a star topology, where all tags communicate directly to the reader, and the reader sends control commands to the tags. The TagSense Active RFID tag protocol is also "tag-talks-first" or TTF, which works very well for ad-hoc networks, where tags are continuously entering or leaving the network. Since the reader needs to quickly process all the packets that are being received from multiple tags, the reader does a minimum amount of processing on the tag data and passes it on to the host.

E. Integrated system

The proposed system has an adaptable, modular and configurable design that allows optimizing its operation for multiple scenarios. In more detail, the integrated system is able to glue the "smart" and "cyber-physical" characteristics with a waste-bin containing any type of wastes consists of two main modules, as depicted in Fig.4:

- the *Field Unit*, that is mounted onto an mobile garbage bin and consists of an active RFID tag, a couple of ultrasonic sensors and optionally an external power battery, as described in previous paragraphs,
- the *Mobile Sink* consists of the active RFID reader, described in previous paragraph and a small-form-factor computer (currently a Raspberry Pi), consuming about 10 W of power (maximum) and having two USB 2.0 ports, built-in WiFi and Bluetooth, and one Ethernet port that is supported by GNU/Linux operating system running from a microSD card.

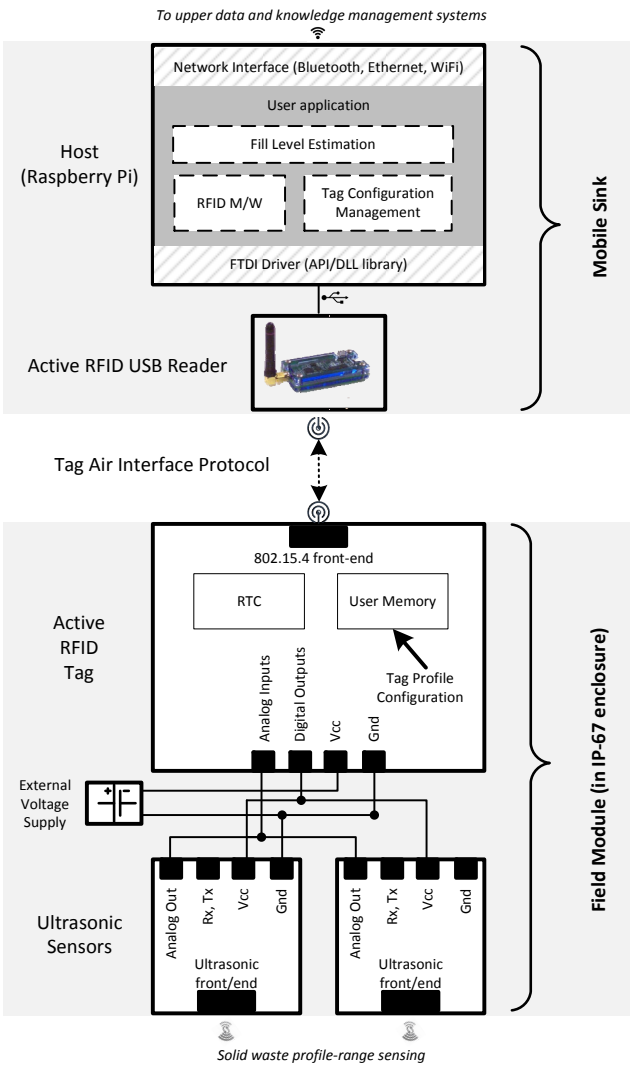

Fig. 4. Proposed smart-bin system architecture.

The waste bins are equipped with the *Field Unit* and the active RFID tags transmit periodically their identity and a sensed value regarding its fill level. This option allows the minimal possible information to be transmitted periodically. All tags are configured to operate in beacon mode, broadcasting the information every few seconds in a range of about 100 meters. Active RFID tag transmission technology is much lighter in complexity and in coping with harsh environments compared to that of WSNs making the architecture robust and resistant.

The *Mobile Sink* could be held by any approved personnel or installed in a vehicle of existing organized transportation systems such as public bus services, postal office vehicles, taxis, municipal police vehicles, etc. in order to unobtrusively collect the required information. As the vehicle roams around the city,

the RFID reader reads the tags and collects the information to the sink. Given the short "packet" size (less than 128 bits), the tag range (100 meters), and a realistic average speed of 40 km/h in a city, the tag beacon interval is extracted so as the passing vehicle completes all necessary transactions with the smart-bin. The use of RFID technology allows reading multiple tags simultaneously (group of nearby bins), without collisions and re-transmissions, as it would be the case of a wireless sensor network.

Finally the application running on the mobile sink is responsible for receiving/caching the information from the field units and, when needed, forward this information to upper data and knowledge management systems. The main tasks of this application are: a) tag communication and configuration management; b) tag frame disassembling; c) fill level estimation based on detected range values from sensors; d) creation of an XML-structured packet containing all relevant per tag/waste-bin information (tag ID, estimated fill level, battery level, timestamp of measurement, etc.) that will be stored or forwarded via the internet to appropriate, high-level systems when this is feasible.

F. Application Scenarios

The system is easily customizable for various application scenarios. Parameters that determine the nature of the scenario can be related to the waste-bin and include its location (urban, suburban or countryside) which correlates to frequency of measurements and possibly the desired accuracy but also the time period (seasonal population changes etc.). Other parameters can be related to the *Mobile Sink* such as which type of vehicle carries it, its power availability and frequency of measurements. Finally, even more parameters of an adopted scenario are related to design choices of the whole system such as desired lifetime of battery before servicing and cost. Various application scenarios were tested for efficacy and power consumption and for the purposes of Dyncargo project the prevalent scenario is as follows.

- The ultrasonic sensors are powered via the RFID tag power output pins in order to be able to control when they operate and thus save power.
- Two sensors are used to estimate the fill level of each bin as they provide the best cost to accuracy ratio.
- The active RFID reader mandates the powering on and off of the sensors when the tags are in range using the minimum of five transmissions. This prevents unnecessary measurements if a reader/tag interaction is not imminent.
- The active RFID tag is programmed to transmit at an interval which will be sufficient for five transmissions to take place while in range with a reader.

IV. Waste-Bin Fill Level Estimation

This section presents bin, waste and sensor modelling, measurement simulation and data statistical processing that was necessary to be performed in order to extract an accurate fill-level estimation pattern of waste-bins that contain any type of materials and incorporate this pattern in the Mobile Sink. The modelling was based on parameters of the actual physical system.

A. Waste-Bin Model

The waste-bin model that was developed is based on the use of a three dimensional matrix representing the entire waste-bin's internal volume. This model was developed using MATLAB because it offers powerful matrix handling tools. The main matrix of the model, the bin matrix, is a matrix whose dimensions are equal to the bin dimensions in centimeters. This allows both an accuracy that is equivalent (or better) than the physical sensors will provide but is also lightweight enough for multiple random simulations. Each value of the bin matrix represents the state of a cubic centimeter found inside the bin. By default, the bin matrix is a zero matrix which corresponds to the empty state of the bin. The size of the bin is parametric and any bin size or shape can be used simply by changing the constants.

B. Sensor Model

The ultrasonic sensors were also modeled as three dimensional matrices. The matrices used were of the same size as the bin matrix with zero values for the areas of the bin which fall outside the detection range of the sensor (Fig. 2) and with unit values for the areas inside the detection area. In order for the correct values of the matrix to be selected, it was necessary to translate the sensor detection diagrams. This was performed manually since sensor detection patterns are only provided schematically by the manufacturer. First, the schematics were converted to parametric distance equations and then the distance equations were used to fill in the values of the sensor matrix which correspond to the detection areas. The number and placement of the sensors, their detection range and their dead range are all parameters that can be changed in the simulation. This allows for a combination of sensor parameters to be simulated as well as different sensor types.

C. Waste Model

One of the most crucial parameters for the simulation was waste modelling, mostly concerning its generation. The representation of waste was made using the bin matrix by setting 1 in the elementary volumes where waste was present and 0 otherwise. More challenging was the method to generate waste in a way that would be of equivalence to the actual physical problem. In absence of an existing model in the bibliography concerning how waste of irregular shape and size gradually fills a bin, it was chosen to perform extensive random scenarios of bin filling that would cover all possible combinations. Then, the less likely situations can be filtered out by statistical analysis of the derived combinations.

Waste generation in the simulation was performed so that the following two outcomes are delivered:

- the upper surface of the waste, in order to be used for sensor measurement simulation
- the actual volume of the waste, in order to be used for bin fill percentage.

These two parameters don't necessarily relate in a well-defined way since sensors cannot detect possible voids underneath the waste surface.

Finally, the simulation was parameter-controlled based on the following input:

- *Elementary Waste Base-Edge*. This defines the base-edge length of the elementary cubic waste generated. After experimenting with various values, it was derived that an elementary base-edge length of 10 to 20 cm provides both reliable results and is similar to the physical problem.
- *Maximum Waste Height*. This defines the maximum height the generated waste could reach. This parameter was placed in order to give control over the waste generation during the first iteration (filling the lower segments of the bin), thus better representing the physical process.

D. Simulation Steps and Results

The complete simulation process took place via the following steps: i) Parameters are set (sensors types, bin sizes etc.); ii) The matrices of the bin and the sensors are created; iii) Waste is generated through a random process based on input parameters; iv) The waste surface is calculated; v) The sensor values are calculated based on the smallest distance between the sensor and the waste surface.; vi) The waste volume is calculated; vii) The fill percentage is calculated; and finally viii) A 3D plot of the waste inside the bin is created.

The final results of interest for the purposes of this work are the actual fill percentage and the sensor measurements. Figure. 5 depicts the simulated final results for a 30k-run simulation using an elementary base-edge length of 20cm for the area of responsibility of a single sensor. In this figure, the vertical axis represents the actual fill-level percentage of the area calculated each time based on the waste-bin and the sensor models, while horizontal axis represents the actual distance detected from the sensor-value based on the specific sensor model.

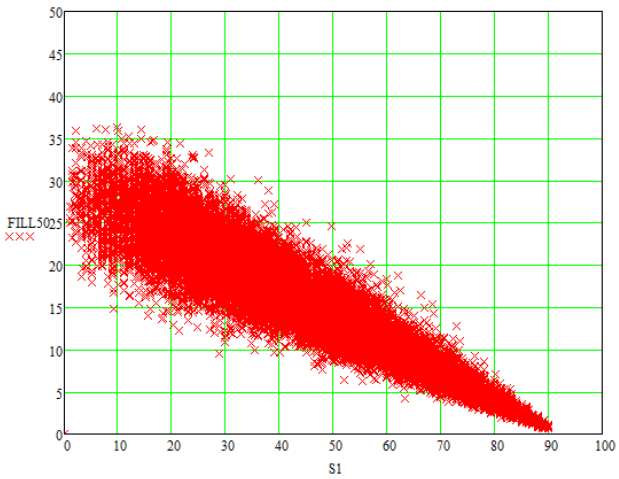

Fig. 5. Scattered data regarding a 30k-runs simulation of single sensor's area of responsibility random fills based on elementary wastes of 20cm base-edge.

It is noticeable that selecting other values for the elementary base-edge length did not alter the shape of the scattered points, but only the amount of spreading of the scatters for medium to low sensor values. This is expected taking into account the actual physical problem.

E. Statistical Analysis and Fill-Level Estimation Model

The raw results derived from a sufficient number of simulations for a variety of models' parameters selection have been further statistically processed. The selected totally random method for filling a bin followed in the simulations provided different fill-levels for a range of identical sensor values. These fill-levels have been grouped so as to extract the corresponding mean value and deviation for each group, thus treat the bin filling with elementary wastes as a Gaussian process. Finally, Fig. 6 presents the elaborated results regarding the fill-level percentage and deviation versus sensor detected waste range in common axis, whereas the dotted lines represents the corresponding linear regression, which is expressed by the following equation:

$$f(x) = 30.219 - 0.327x \tag{1}$$

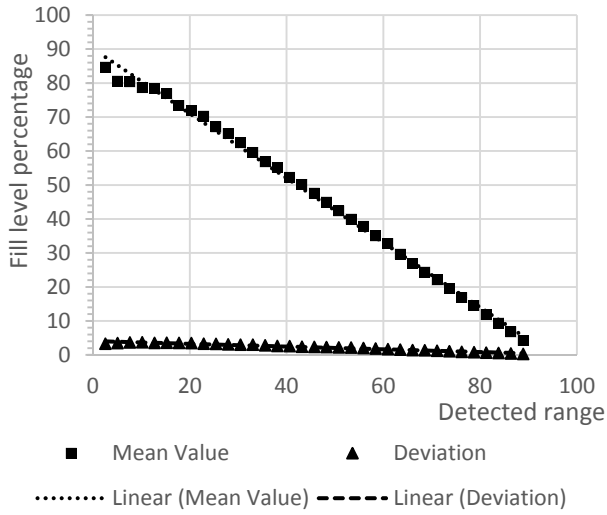

Fig. 6. Fill-level percentage and deviation versus detected waste range.

V. Verification Measurements and Power Consumption

A. Experiment Setup for Verification

The verification of the simulations has been performed using the standard waste-bin type mentioned in a previous section. The ultrasonic sensors were mounted on a strip running along the top edge of the main waste-bin compartment. The ultrasonic sensors were initially connected to an Arduino Mega prototyping board with an LCD display which allowed for easy setting up of the experiment and initial measurements, as depicted in Fig. 7.

At the main stage, the experiment was performed using the RFID tags and readers which allows for verification of the complete data chain. The aim of the verification was not to perform an exhaustive series of experiments, which only a simulation can do, but to verify carefully selected scenarios of various fill-levels and waste placements which would indicate that the simulation results correspond to the real world scenario. An experiment which included gradual filling of the bin using cardboards (whose dimension were measured to estimate waste

Fig. 7. Experiment measurement setup for verification.

volume inserted) showed that the algorithm was estimating fill level with better than 90% accuracy for this specific scenario.

In order to interpret the received measurements, it was necessary to construct the appropriate equations leading from the sensor measurement to the reported valued at the RFID reader. The ultrasonic sensor outputs its distance (expressed in inches) measurements as analog voltage divided to 512 distinct levels ranging from 0V to Vcc, therefore it is necessary to also take into account the current voltage of the power supply. The RFID tag digitizes the analog voltage input using 10-bits and transmits a hexadecimal value which is then decoded into decimal centimeters. The chain of equations leading to the interpretation of the measurements is as follows:

$$TagValue = \frac{TagData \cdot BatteryLevel}{1024}(Volts) \tag{2}$$

$$Range = \frac{TagValue \cdot 2.54 \cdot 512}{1024}(cm) \tag{3}$$

thus deriving the final formula:

$$Range = \frac{2.54}{2} TagData(cm) \tag{4}$$

The chosen sensor model for the physical system was made so that it is possible to use two sensors, each measuring one half of the bin without overlapping their areas of detection. This allowed better verification of the measurements as well as the ability to provide a fill level estimate which would be the sum of the two estimates for the half-bin.

B. Power Consumption of the Field Module

As described in Section III, the proposed system consists of the *Field Module*, mounted onto physical waste-bins and the *Mobile Sink*, mounted onto vehicles with approved personnel. Therefore, it is of great importance to calculate the power consumption of the *Field Unit*, since it is going to be deployed in large scale and of course operating under field conditions.

The power consumption of the *Field Module* is equal to the consumption of the sensors and the RFID tags. The sensors do not include any programmable functions so they must be powered via the RFID tag which can be programmed and controlled extensively. Considering the range of voltages the sensors (2.5V to 5.5V) and the tag (2.2V to 3V) can receive, it was chosen to use 3V as the voltage input which can be readily provided with ordinary rechargeable batteries.

Sensors consume 2mA [21] when powered and no power when idle. Assuming k to be the daily number of tag/reader sessions and d the tag transmission interval, the daily power consumptions of the 2-sensors, employed in our prototype, can be derived as:

$$P_{sensor} = 2mA \cdot t_h = 2 \cdot \frac{2 \cdot k \cdot d}{3600} mAh \tag{5}$$

The power consumed by the active RFID tag depends on the number of transmissions since the tag consume virtually no power when idle. According to information provided from the tag specifications [22] and assuming d to be the transmission interval, the daily power consumption of the tag can be derived as:

$$P_{tag} = \frac{86400\,\text{sec}}{d\,\text{sec}/trans} \cdot 4.18 \cdot 10^{-4} \frac{mAh}{trans} \tag{6}$$

However, tags can be programmed to be in sleep mode for part of the day. Assuming f_{alarm} to be the percentage of the day that the tag is powered, the total daily consumption of the system can be derived as:

$$P_{daily} = P_{tag} \cdot f_{alarm} + P_{sensor} \tag{7}$$

For a typical scenario of 3-sec transmission interval, 10-daily tag/reader sessions and 50% sleep time we get an average daily consumption of 6.05 mAh which would allow for continuous operation for 200 days using a typical Lithium battery of 1200 mAh assuming no recharging. Finally, since the *Field Unit* is meant to operate at the open field, a solar power module could significantly extend battery and the system's lifetime.

VI. System Scalability

A significant advantage of the proposed approach is that the system is not limited to a specific type or size of waste-bin but can be scaled regarding any of its components including waste-bin sizes and shapes, numbers of sensors and information data flow. This is due to the fact that the architectural components have discrete roles and functional independence. Scalability was considered in both modelling and simulation as well as physical component selection. The scalability of the system is described in detail per scalable component in the next paragraphs.

A. Scaling for Waste-Bin Geometry and Sensor Type

The scalability of waste-bin size and shape is made possible based on the following design choices:

- Each sensor has its own independent area of responsibility. The way the system was designed, each sensor is responsible for a specific area of the waste-bin and there is no overlap between areas of various sensors.
- The chosen ultrasonic sensor comes in multiple versions of beam range and width. The type of sensor that was chosen is very versatile because a wide range of models exist with different characteristics concerning their beam width, detection range and resolution. All these models provide the same basic functionalities and logic of measurement.

However, the use of versatile programmable active RFID tags, which provides multiple analog inputs and digital I/O's, allows the co-existence of other sensor types that can trigger events or assist in measurement. Types of sensors that can be of use may include magnetic latches to monitor waste-bin lid status as well as temperature and humidity sensors. As the active RFID tag can sample multiple inputs and collectively transmit them to the reader, addition of various sensors can take place by slightly altering the tag profile and RFID M/W software, regarding tag frame disassembling; without affecting the architecture.

B. Scaling for Information Data Flow

The information data flow across the system is based on RFID technology. Even though the active RFID tag can control a number of sensors, in large applications where more sensors are needed additional RFID tags can be used for the extra sensors. The RFID tags and readers automatically exchange information whenever they are in range. This means that the addition of new waste-bins to the system or even the addition of extra RFID tags per waste-bin, could be realized without affecting the architecture and not even raising the need for reprogramming the tags or the reader. In such a case the collection of the data would be again realized automatically; however it would be of the related backend software's responsibility to correlate the new additions with their physical interpretations.

VII. Conclusions and Future Directions

The presented system has been developed and implemented as part of the Dynacargo project, and is part of an innovative smart city framework for urban solid waste collection. Our proposed architecture exploits RFID communication in order to reduce costs, simplify system operation and support scaling at urban level. The fill-level estimation method using ultrasonic sensors provides accurate results both in the simulation and the physical experiments. We also described the system design and the implemented prototype of the presented architecture among with measurements verification that gave very promising results.

The proposed system will be thoroughly tested during the Dynacargo project's pilot that will take place in the Municipality of Nafpaktia in Greece, during 2015 in the forthcoming months. The Municipality has an area of 870.38 km^2 and a population of 27,800 people (in 2011 census). Eleven municipal trucks are used for waste collection from the bins. There are about 2,100 solid waste bins installed in about 140 settlements, villages, and towns in the area, including urban, suburban, and rural areas. The pilot tests will allow gaining insights on areas of improvement and experiment with vehicle movement issues in a city terrain.

Acknowledgment

This work has been financially supported by the Greek General Secretariat of Research and Technology [23] and European Union under the project "11SYN_10_456: Dyanacargo" [3].

References

[1] "UBi: Ultrasonic sensor." [Online]. Available: www.smartbin.com.

[2] "U-Dump: Urban waste collection sensor." [Online]. Available: www.urbiotica.com.

[3] "Dynacargo Project." [Online]. Available: http://dynacargo.cied.teiwest.gr.

[4] G. Asimakopoulos, S. Christodoulou, A. Gizas, V. Triantafillou, G. Tzimas, J. Gialelis, A. Voyiatzis, D. Karadimas, and A. Papalambrou, "Architecture and Implementation Issues, Towards a Dynamic Waste Collection Management System," in Proceedings of the 24th International Conference on World Wide Web Companion (WWW '15 Companion), International World Wide Web Conferences Steering Committee, Republic and Canton of Geneva, Switzerland, 2015, pp. 1383-1388.

[5] M. A. Al Mamun, M. A. Hannan, A. Hussain, and H. Basri, "Wireless Sensor Network Prototype for Solid Waste Bin Monitoring with Energy Efficient Sensing Algorithm," in 2013 IEEE 16th International Conference on Computational Science and Engineering, 2013, pp. 382–387.

[6] M. Arebey, M. A. Hannan, H. Basri, R. A. Begum, and H. Abdullah, "Solid waste monitoring system integration based on RFID, GPS and camera," in 2010 International Conference on Intelligent and Advanced Systems, ICIAS 2010, 2010.

[7] M. Faccio, A. Persona, and G. Zanin, "Waste collection multi objective model with real time traceability data," Waste Manag., vol. 31, no. 12, pp. 2391–2405, 2011.

[8] T. Gomes, N. Brito, J. Mendes, J. Cabral, and A. Tavares, "WECO: A wireless platform for monitoring recycling point spots," in Proceedings of the Mediterranean Electrotechnical Conference - MELECON, 2012, pp. 468–472.

[9] O. M. Johansson, "The effect of dynamic scheduling and routing in a solid waste management system," Waste Manag., vol. 26, no. 8, pp. 875–885, 2006.

[10] R. Issac and M. Akshai, "SVASTHA: An effective solid waste management system for Thiruvalla Municipality in Android OS," in c2013 IEEE Global Humanitarian Technology Conference: South Asia Satellite, GHTC-SAS 2013, 2013, pp. 254–259.

[11] P. Reis, R. Pitarma, C. Goncalves, and F. Caetano, "Intelligent system for valorizing solid urban waste," in 2014 9th Iberian Conference on Information Systems and Technologies (CISTI), 2014, pp. 1–4.

[12] F. Vicentini, A. Giusti, A. Rovetta, X. Fan, Q. He, M. Zhu, and B. Liu, "Sensorized waste collection container for content estimation and collection optimization," Waste Manag., vol. 29, no. 5, pp. 1467–1472, 2009.

[13] M. A. Hannan, M. Arebey, R. A. Begum, and H. Basri, "An automated solid waste bin level detection system using a gray level aura matrix," Waste Manag., vol. 32, no. 12, pp. 2229–2238, 2012.

[14] P. O. Leitão, M. B. Marques, P. Dep, and I. Porto, "Reliability Of A Line-of-view Sensor For Recycling Point Waste Containers," in ISWA/APESB2009 World Congress, 2009.

[15] S. Longhi, D. Marzioni, E. Alidori, G. Di Buo, M. Prist, M. Grisostomi, and M. Pirro, "Solid Waste Management Architecture using Wireless Sensor Network technology," 2012.

[16] V. Catania and D. Ventura, "An Approach for Monitoring and Smart Planning of Urban Solid Waste Management Using Smart-M3 Platform," in 15th Conference of Open Innovations Association FRUCT, 2014, pp. 24–31.

[17] D. Cassaniti, "A Multi-Hop 6LoWPAN Wireless Sensor Network for Waste Management Optimization," 2011.

[18] "EU FP7 Project: 'Future Cities.'" [Online]. Available: http://futurecitiesproject.eu.

[19] "EU FP7 Project: 'Straightsol.'" [Online]. Available: http://www.straightsol.eu.

[20] F. McLeod, G. Erdogan, T. Cherrett, T. Bektas, N. Davies, D. Shingleton, C. Speed, J. Dickinson, and S. Norgate, "Improving collection efficiency through remote monitoring of charity assets," Waste Manag., vol. 34, no. 2, pp. 273–280, 2014.

[21] "MB1040 LV-MaxSonar-EZ4 Datasheet." [Online]. Available: www.maxbotix.com.

[22] "ZT-50-mini Active RFID Tag and ZR-USB Active RFID Reader." [Online]. Available: www.tagsense.com.

[23] "General Secretariat for Research and Technology." [Online]. Available: www.gsrt.gr.