An integrated node for Smart-City applications based on active RFID tags; Use case on waste-bins

Dimitris Karadimas, Andreas Papalambrou, John Gialelis and Stavros Koubias
Industrial Systems Institute / "Athena" Research Innovation Center and Department of Electrical and Computer Engineering, University of Patras, Patras, Greece
{karadimas, papalambrou, gialelis}@isi.gr

***Abstract*— This work presents the concept and methodology as well as the architecture and physical implementation of an integrated node for smart-city applications. The presented integrated node lies on active RFID technology whereas the use case illustrated, with results from a small-scale verification of the presented node, refers to common-type waste-bins. The sensing units deployed for the use case are ultrasonic sensors that provide ranging information which is translated to fill-level estimations; however the use of a versatile active RFID tag within the node is able to afford multiple sensors for a variety of smart-city applications. The most important benefits of the presented node are power minimization, utilization of low-cost components and accurate fill-level estimation with a tiny data-load fingerprint, regarding the specific use case on waste-bins, whereas the node has to be deployed on public means of transportation or similar standard route vehicles within an urban or suburban context.**

Keywords— internet of things; urban solid waste; ultrasonic sensors; waste-bin fill-level estimation; active RFID tag; smart-city

I. Introduction

A smart city is an urban development vision to integrate multiple information and communication technology (ICT) solutions in order to manage a city's assets. City's assets may include, but not limited to, local departments information systems, schools, libraries, transportation systems, hospitals, power plants, law enforcement, vehicle traffic, waste management and other community services. The goal of building a smart city is to improve quality of life by using technology to improve the efficiency of services and meet residents' needs. Nowadays, ICT developments and especially Internet of Things (IoT) concept and approach allows city officials to interact directly with the community and the city infrastructure by being informed, in real time, for what is happening within the city context or regarding its assets, how the city is evolving, and finally to enable development of new (or enhancement of existing) policies for obtaining a better quality of life.

The aforementioned concept is being realized through the use of real-time systems and sensors, where (a) data are collected from citizens and objects (things), then (b) processed in real-time and finally (c) the gathered information and related extracted knowledge are becoming the keys to tackling inefficiency [1].

In this context, urban/suburban waste management involves numerous waste bins that exhibit significant filling variations (over days and seasons or location) and diverse requirements for emptying, from sporadic (a few times within a week) to very frequent (several times a day). On the other hand other waste forms (i.e. agricultural, biomedical, chemical, electronic, mineral, organic/inorganic, and radioactive, etc.) are characterized by specific collection points, uniform and predictable production, and equal, usually long, filling periods. The detection of the fill-level for urban solid-waste-bins presents many difficulties due to the various irregularities of the waste-bin filling process, such as the irregular shape and the variety of the included materials. More challenges exist for the economical and energy efficient data aggregation from a large number of bins, as the harsh environmental conditions (e.g., humidity, temperature, and dust) can significantly affect the sensor measurement accuracy and reliability, while on the other hand these conditions constitute parameters that one should also take into account for a holistic waste management process. These challenges are being dealt within this work, which is part of the Dynacargo project [2].

II. Related Work and Similar Products

Currently, several research approaches exist tackling issues related with waste collection and management and especially information collection at the point of waste disposal [3]-[9]. However, most of them are expensive in terms of total required equipment, focusing only on waste management, apart from the smart city vision, while some of them deal with the problem of collecting only recyclable waste, which can be collected at less frequent intervals and have a more stable production frequency. Moreover, a few fill-level sensing prototypes and architectures can be found in the literature [10]-[18].

In some cases, urban waste is separated, according to its source material, to respective waste bins types such as glass; books; textiles; oils or even silos. Currently many commercial solutions [19]-[22] or open-source initiatives [23] have appeared dealing with the fill-level estimation and monitoring of such waste bins containers and the corresponding efficient routing of waste vehicles. However, an integrated solution encompassing smart city vision is not yet available on one hand, while on the other hand all above solutions are based either on existing networking infrastructure that should exist within a city (i.e. WiFi or ZigBee, etc.) or on standalone 3G or GSM networking capability, which in turn is a costly solution for a long-term establishment.

978-1-5090-1314-2/16/$31.00 ©2016 IEEE

Finally, the above research approaches or commercial solutions are not able to tackle with regions that are outside an urban environment [24] (i.e. suburban, isolated or rural areas), where smart city vision is rather difficult to be accomplished within the next few years. Based on the above, the presented integrated node promises to be a versatile and scalable solution that is based on resource-limited embedded devices, able to transfer smart-city vision even outside the context of a smart-city, at a low operational cost and with accuracy as described in the next sections.

III. Concept and Methodology of the Integrated Node

A. Concept of the RFID-based integrated node

An integrated smart city node should meet some basic requirements regarding its ability to be used in multiple smart city scenarios and provide affordable, reliable and versatile functions including sensor connectivity, energy efficiency and communication. The most important requirements that form the concept of the integrated smart city node based on RFID technology are the following:

- Flexibility of the hardware node. While it is possible to implement a node that performs a single task (such as waste bin monitoring which is the main scenario of this work), an integrated smart city approach requires the ability to implement multiple smart city features. This is due to cost considerations (a single task sometimes cannot justify the investment) but also due to the fact that each smart city application can benefit from information mining performed by other tasks. For example, traffic information from nodes monitoring car traffic can assist the waste collection route optimization combined with waste bin level monitoring. Other smart city applications that can be integrated include environmental monitoring, parking spot monitoring and more. In order to be future-proof and support additional smart city applications, the hardware node should provide a number of inputs of various types (digital, analog etc.) and be able to simultaneously control and transmit information regarding all of them. All these requirements are met with the choice of the active RFID node which provides analog inputs and digital input/output pins with the ability to transmit all sensor information simultaneously within a single beacon.
- Energy considerations. Energy is one of the scarcest resources when deploying free wireless nodes that are not permanently wired to a power or network connection. While it is possible for some applications to permanently wire nodes, many applications such as waste bin monitoring require them to be wireless (i.e. to allow bin collection, bin replacement etc.). As a result, power consumption of the node and sensors should be minimal and managed in an intelligent way so as to prolong battery lifetime. Our RFID-based node provides significant power saving since transmission only takes place at specified intervals and is of minimal power. Moreover, timing functions that are built in the active RFID chip can turn sensors on and off; thus only consuming power when a measurement needs to be taken.
- Communication methods. Various communication options exist that allow city-wide networks to exchange data such as WiFi, GSM, Zigbee and more. Some options (like GSM) make use of existing infrastructure while other, such as Zigbee, require the deployment of specific purpose metropolitan networks. All options exhibit some disadvantages such as high energy consumption, communication provider costs, infrastructure deployment costs, communication range and more. Moreover, such networks should survive connectivity disruptions and should show resilience to the availability and quality of available links. RFID communication does not rely on any communication infrastructure, does not consume a lot of energy and its range needs only be sufficient for the mobile sinks to receive the signal.

The above considerations combined with a desired ubiquitous networking approach led us to the choice of RFID technology combined with Delay Tolerant Networking (DTN) [25] employment for the networking infrastructure of the integrated smart city node.

B. Components of the RFID-based integrated node

The active RFID tag constitutes the basis of the data aggregation and transmission unit for the smart city integrated node. The selected tags (ZT-50-mini Tag from TagSense [26]) can operate with standard 3V voltage input providing increased lifetime that equals to millions of beacon transmissions. The employed active tags offer extra I/O pins for communicating with external devices such as the ultrasonic sensing units used in the waste monitoring scenario. This setup allows powering the sensors and the RFID tag from the same source, either tag's battery or an external power source. The tag itself supports various operating modes, including standard beacons at programmable time intervals, sleep, wake up at regular intervals and also wake up at external trigger.

The proposed system has an adaptable, modular and configurable design that allows optimizing its operation for multiple scenarios including single sensor, multiple sensor and combinations. The basic units for the RFID-based data exchange are the following:

- the *Field Unit*, that is mounted onto an mobile garbage bin and consists of an active RFID tag, the sensors (two ultrasonic sensors in IP-67 enclosure for the waste monitoring scenario), an external battery and the required cabling.
- the *Mobile Sink* consists of the active RFID reader and a Raspberry Pi, consuming less than 10 W of power and running a version of GNU/Linux operating system from a microSD card and the corresponding RFID middleware.

The aforementioned units are presented in detail in the following figure.

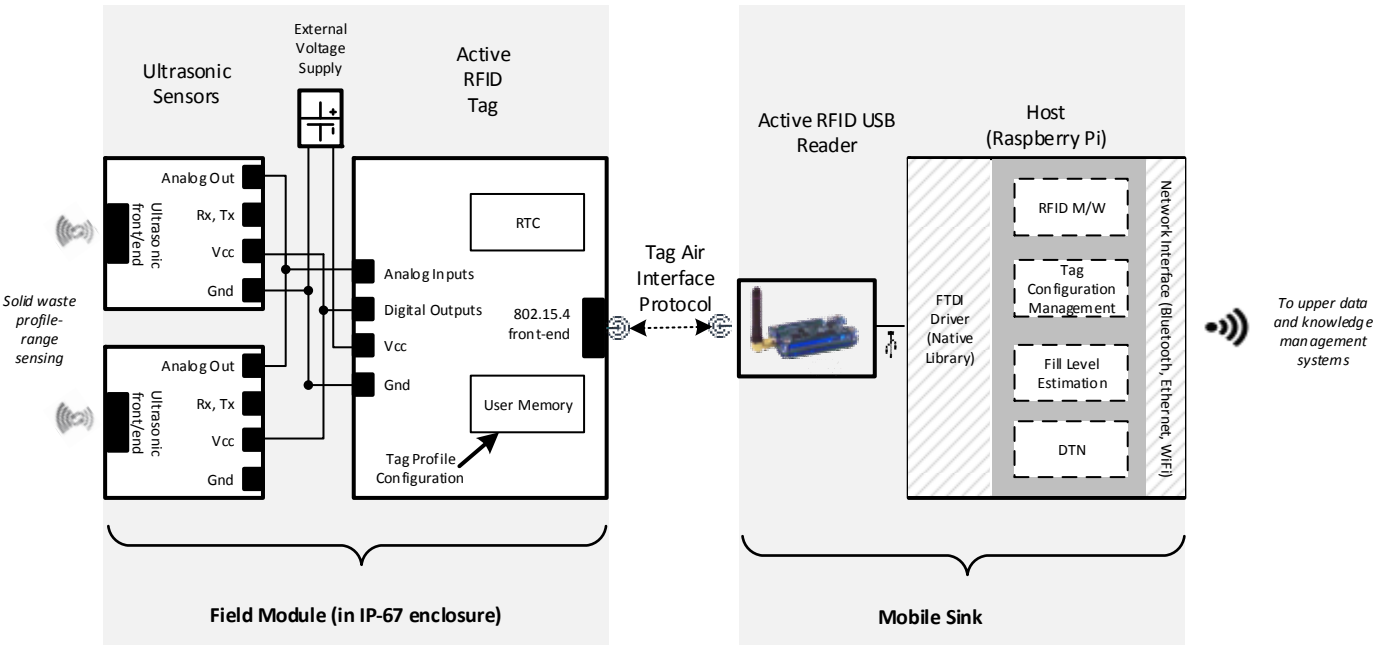

Fig. 1. Details of the RFID-based integrated node.

C. *Waste-bin fill-level monitoring methodology*

The above presented architectural description of the proposed system indicates that it is easily customizable for the waste-bin fill level monitoring application. Parameters that determine the nature of the scenario can be related to the sensing needs and include its location (urban, suburban or countryside) which correlates to frequency of measurements and possibly the desired accuracy but also the time period (seasonal population changes etc.). Other parameters can be related to the Mobile Sink such as which type of vehicle carries it, its power availability and frequency of measurements. Finally, even more parameters of the adopted scenario are related to design choices of the whole system such as desired lifetime of battery before servicing and cost. Various application scenarios were tested for efficacy and power consumption and the prevalent scenario is as follows.

- The sensors are powered via the RFID tag's digital output pins in order to be able to control when they operate and thus save power.
- The active RFID reader mandates the powering on and off of the sensors when the tags are in range using the minimum of three transmissions. This prevents unnecessary measurements if a reader/tag interaction is not imminent.
- The active RFID tag is programmed to transmit at an interval which will be sufficient for three transmissions to occur while in range with a Mobile Sink with an RFID reader mounted on a moving vehicle.

Bin, waste and sensor modelling, measurement simulation as well as data statistical processing were necessary to be performed in order to extract an accurate fill-level estimation pattern of waste-bins that contain any type of materials and incorporate this pattern in the Mobile Sink. The modelling was based on parameters of the actual physical system. The waste-bin model that was developed is based on the use of a three dimensional matrix representing the entire waste-bin's internal volume. This model was developed using MATLAB because it offers powerful matrix handling tools. Each value of the bin matrix represents the state of a cubic centimeter found inside the bin. By default, the bin matrix is a zero matrix which corresponds to the empty state of the bin. The ultrasonic sensors [27] were also modeled as three dimensional matrices. The matrices used were of the same size as the bin matrix with zero values for the areas of the bin which fall outside the detection range of the sensor and with unit values for the areas inside the detection area, based on the sensor detection diagrams. One of the most crucial parameters for the simulation was waste modelling, mostly concerning its generation. The representation of waste was made using the bin matrix by setting 1s in the elementary volumes where waste was present and 0s otherwise. More challenging was the method to generate waste in a way that would be of equivalence to the actual physical problem. Therefore, extensive random scenarios for bin filling process simulation have been selected, in order to cover all possible combinations. Then, the less likely situations have been filtered out by statistical analysis of the derived results.

The simulation process produced pairs of the actual fill percentage and the sensor measurements using an elementary waste object of base-edge length of 20cm for the area of responsibility of a single sensor. The raw results derived from a sufficient number of simulations (30k-runs) for a variety of models' parameters selection have been further statistically processed. The selected, totally random, method for simulating filling process of a waste-bin followed in the simulations provided different fill-levels for a range of identical sensor values. These fill-levels have been grouped so as to extract the corresponding mean value and deviation for each group, thus

treat the bin filling with elementary wastes as a Gaussian process.

IV. Deployment of the Integrated Node

A. Physical system deployment

The integrated node has to be deployed at the necessary locations for each application. In the waste monitoring scenario, the waste-bin node is envisaged to be mounted on the top lid of a waste-bin, as depicted in Fig. 2. The bin has a main compartment whose internal dimensions are approximately 110x90x90 cm, consisting of slight curved-shaped walls. It has a lid-opening mechanism and is made of durable hard plastic. The node (Field Unit) consists of the sensing unit, the active RFID tag for data aggregation and transmission, as well as an external battery source. The sensing unit is based on ultrasonic sensors that are advantageous in providing ranging measurements independently of the contained objects, thus making possible the corresponding translation into fill level measurements. For the purpose of this task, the ultrasonic sensors of Maxbotix were selected which provide a variety of detection patterns, accuracy and durability. The measurement of the sensors essentially provides the distance to the nearest object of efficient size. Since waste in the form of irregular-shaped objects can occupy the bin space in various arrangements, there is typically some difference between the highest bin level and the actual fill percentage. Accuracy of the fill-level estimation can be increased by providing more sensing points which will decrease the influence of irregular arrangements as these will only be limited to the sensing area of each sensing point. Following experimentation with placement and number of sensors it was concluded that a single sensor placed in the center of the lid was providing good results but over-estimating the fill level due to the typically higher level of waste in the center of the bin. As a result, various combinations of two sensors were examined and two sensors at specific positions were chosen for the final system.

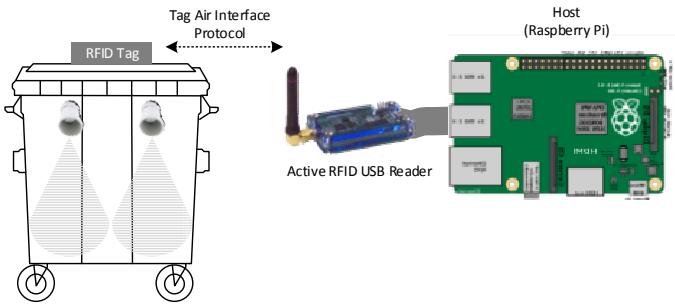

Fig. 2. Deployment of the physical system.

B. Data flow

First-level data flow through the system regards the sensor measurement transmission through the RFID field unit to the mobile sink that were described in section III. The waste bins are equipped with the Field Unit and the active RFID tags transmit periodically the sensed value among other RFID-related attributes (tag's identity, battery level, RSSI, etc.). This option allows the minimal possible information to be transmitted periodically. All tags are configured to operate in beacon mode, broadcasting the information every few seconds in a range of about 100 meters.

The Mobile Sink could be held by any approved personnel or installed in a vehicle of existing organized transportation systems such as public bus services, postal office vehicles, taxis, municipal police vehicles, etc. in order to unobtrusively collect the required information. As the vehicle roams around the city, the RFID reader reads the tags and collects the information to the sink. Given the short "packet" size (less than 128 bits), the tag range (100 meters), and a realistic average speed of 40 km/h in a city, the tag beacon interval is extracted so as the passing vehicle completes all necessary transactions with the waste-bin. The use of RFID technology allows reading multiple tags simultaneously without collisions and re-transmissions, as it would be the case of a wireless sensor network.

Second-level data flow in the system takes place between the mobile sink and the backend system. For this communication and in order to account for varying availabilities of communication (rural areas, dead zones, temporary loss of communication), DTN technology was used. The DTN2 [30] implementation of the Bundle protocol was deployed in the mobile sink as well the backend in order to provide an effective and reliable way of getting the data to the backend. Figure 3 provides some details on data flow and software components of the mobile-sink.

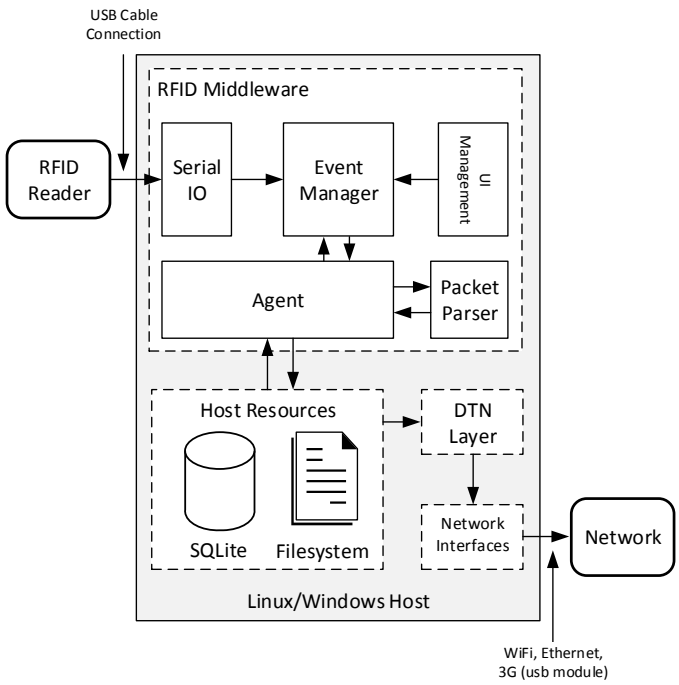

Fig. 3. Software component of the mobile-sink.

C. Scalability

A significant advantage of the proposed approach is that the system is not limited to a specific type or size of waste-bin but can be scaled regarding any of its components including waste-bin sizes and shapes, numbers of sensors and information data flow. This is due to the fact that the architectural components have discrete roles and functional independence. Scalability

was considered in both modelling and simulation as well as physical component selection. The scalability of waste-bin size and shape is made possible based on the design choices that each sensor has its own independent area of responsibility as well because ultrasonic sensors come in multiple versions of beam range and width. The use of versatile programmable active RFID tags, which provides multiple analog inputs and digital I/O's, allows the co-existence of other sensor types that can trigger events or assist in measurement. Even though the active RFID tag can control a number of sensors, in large applications, where more sensors are needed, additional RFID tags can be used for the extra sensors. The RFID tags and readers automatically exchange information whenever they are in range. This means that the addition of new waste-bins to the system or even the addition of extra RFID tags per waste-bin, could be realized without affecting the architecture and not even raising the need for reprogramming the tags or the reader. In such a case the collection of the data would be again realized automatically; however it would be of the related backend software's responsibility to correlate the new additions with their physical interpretations.

V. Verification and Small-Scale Demonstration

The integrated node, as described in sections III and IV, has been at first deployed in a physical verification at a laboratory environment. The test environment included, apart from the integrated node, a waste-bin of 1,148 liters volume (identical with the one mostly used) and a set of cardboard boxes of known pre-calculated volumes. Figure 4 depicts the volume distribution of the employed experiment items, which have been selected so as to cover a volume range from a few up to some dozens of liters, in order to fit the closest possible with real world's circumstances.

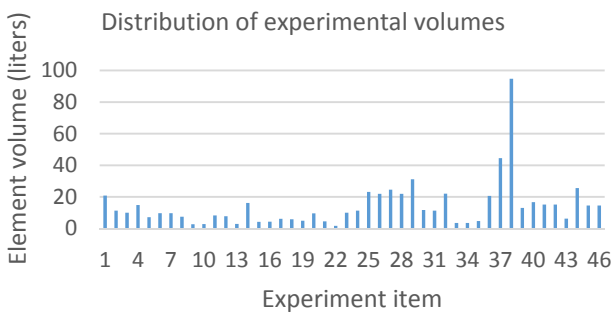

Fig. 4. Volume distribution of employed experimental cardborad boxes.

Subsequently, a large set of experiments has been performed by simulating the real world's waste-bin fill process with dropping a random set of cardboard boxes in the waste-bin. In each round, the volume of the used cardboard boxes was known in advance and also a measurement was acquired using the integrated node.

Figure 5 depicts the per cent error between the two aforementioned volumes for a sample set of 30-experiments. This error is considered to be the maximum possible, since the cardboard boxes haven't been placed within the waste-bin in any specific order, but fully randomly. However the maximum per cent error observed is approximately 12%, which is considered to be significantly low, taking into account that the accurate volume value of a waste-bin's contents does not provide more information to a designated authority than the fill level status approximation does. A few experiments with uniform placement of the cardboard boxes have been also performed in order to verify sensors and measurements accuracy, which concluded to a less than 3% error.

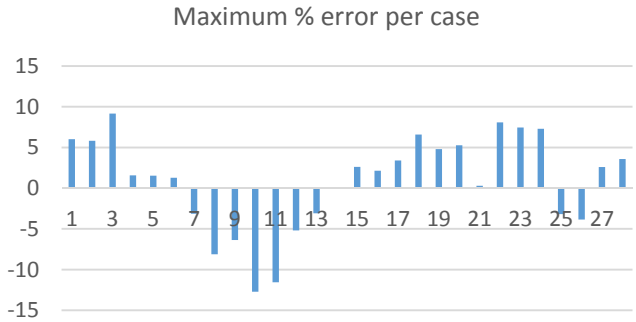

Fig. 5. Physical experiments and corresponding estimation errors.

Finally, a small-scale end-to-end verification of the integrated node has been performed in University of Patras campus, by deploying a simple scenario of three waste-bins and a moving vehicle, as depicted in following figure.

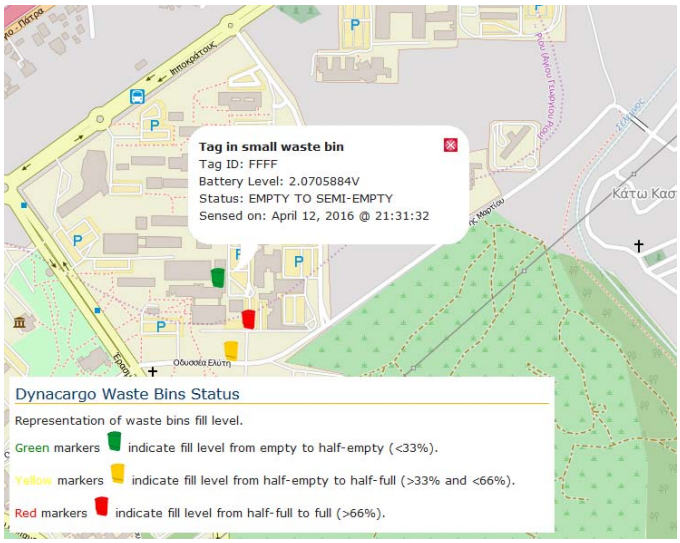

Fig. 6. Waste-bins actual position in a small-scale verification scenario.

The verification scenario consisted of 3-waste-bins, each one equipped with a set of ultrasound sensors and an active RFID tag, where the mobile sink node (the active RFID reader mounted on the Raspberry Pi) was mounted on a moving vehicle speeding up to 60km/h (which is assumed as high speed for loaded waste-trucks). Data from active tags has been successfully received by the mobile sink for various speeds of the moving vehicle. RFID middleware transformed the acquired measurements into JSON structures that were afterwards pushed to a central database via DTN feature, which ensured information transmission at any circumstances, i.e. with or without an actual wireless network connection to be present, thus validating the DTN scenario for isolated rural

areas. Finally, DTN was responsible for data uploading to the central database via REST web services, whereas the information stored in the central database is afterwards presented in a simple environment, as depicted in Fig. 6, based on Open Street Map (OSM) [28].

The JSON structure that is pushed in the central database contains raw data from the sensors as well as processed data, i.e. fill level estimation that is produced within the RFID middleware. The following figure depicts the actual notation of the aforementioned structure which is explained in TABLE I.


```
{
    "RID": "FFFF",
    "data": [
        {
            "TID": "0005",
            "BL": "2.95",
            "RSSI": "E7",
            "TS": 1429617039,
            "EFL": "60.21",
            "SNSR": [
                {
                    "ID": "A",
                    "STS": "1429617035",
                    "EHFL": "75.23",
                    "DCM": "15.2"
                },
                {
                    "ID": "B",
                    "STS": "1429617043",
                    "EHFL": "33.44",
                    "DCM": "27.34"
                }
            ]
        }
    ]
}
```


Fig. 7. Sample data snapshot from the demonstration.

TABLE I. JSON STRUCTURE NOTATION

Node	*Description*
RID	Active RFID reader ID (hex value)
data	Payload for multiple nodes (array)
TID	Active RFID tag ID (hex value)
BL	Battery level of active RFID tag (volts)
RSSI	RFID communication signal strength (hex value)
TS	Timestamp of RFID middleware measurement event
EFL	Estimated fill level percentage, according to RFID middleware
SNSR	Sensors raw data (array)[a]
ID	Sensor identification tag
STS	Timestamp pf sensor measurement
EHFL	Estimated half fill level (per sensor estimation)
DCM	Distance measured from the sensor (cm)

[a] Multiple sensors of other types can also be supported within the same integrated node

Data collected in the central database can be further elaborated (i.e. combined with corresponding historical data) via advanced data processing techniques in order to provide input to other information systems, i.e. schedulers of the waste-trucks timetables, etc.

VI. CONCLUSIONS

The presented system has been designed and implemented in the framework of the national funded 11SYN_10_456 “Dynacargo” project, promoting an innovative smart city framework for urban solid waste collection. The proposed architecture exploits RFID communication in order to reduce costs and enhance robustness, simplifies system operation and fully supports scaling at urban level while promoting social involvement as it should be in solid waste management. The fill-level estimation method using ultrasonic sensors provided accurate results both in the simulation and the physical experiments. We also described the system design and the implemented prototype of the presented architecture along with experimental measurements and a real-world small-scale verification with very promising results. Future work comprises the extension of this idea to a more granular level, i.e., block of flats, involving all types of waste including recyclable.

ACKNOWLEDGMENT

This work has been financially supported by the Greek General Secretariat of Research and Technology [29] and European Union under the project “11SYN_10_456: Dynacargo” [2].

REFERENCES

[1] Sam Musa. "Smart City Roadmap". January 2016. [Online]. Available: www.academia.edu/21181336/Smart_City_Roadmap

[2] "Dynacargo Project." [Online]. Available: dynacargo.cied.teiwest.gr

[3] M. A. Al Mamun, M. A. Hannan, A. Hussain, and H. Basri, "Wireless Sensor Network Prototype for Solid Waste Bin Monitoring with Energy Efficient Sensing Algorithm," in 2013 IEEE 16th International Conference on Computational Science and Engineering, 2013, pp. 382-387.

[4] M. Arebey, M. A. Hannan, H. Basri, R. A. Begum, and H. Abdullah, "Solid waste monitoring system integration based on RFID, GPS and camera," in 2010 International Conference on Intelligent and Advanced Systems, ICIAS 2010, 2010.

[5] M. Faccio, A. Persona, and G. Zanin, "Waste collection multi objective model with real time traceability data," Waste Manag., vol. 31, no. 12, pp. 2391-2405, 2011.

[6] T. Gomes, N. Brito, J. Mendes, J. Cabral, and A. Tavares, "WECO: A wireless platform for monitoring recycling point spots," in Proceedings of the Mediterranean Electrotechnical Conference - MELECON, 2012, pp. 468-472.

[7] O. M. Johansson, "The effect of dynamic scheduling and routing in a solid waste management system," Waste Manag., vol. 26, no. 8, pp. 875-885, 2006.

[8] R. Issac and M. Akshai, "SVASTHA: An effective solid waste management system for Thiruvalla Municipality in Android OS," in c2013 IEEE Global Humanitarian Technology Conference: South Asia Satellite, GHTC-SAS 2013, 2013, pp. 254-259.

[9] P. Reis, R. Pitarma, C. Goncalves, and F. Caetano, "Intelligent system for valorizing solid urban waste," in 2014 9th Iberian Conference on Information Systems and Technologies (CISTI), 2014, pp. 1-4.

[10] F. Vicentini, A. Giusti, A. Rovetta, X. Fan, Q. He, M. Zhu, and B. Liu, "Sensorized waste collection container for content estimation and collection optimization," Waste Manag., vol. 29, no. 5, pp. 1467-1472, 2009.

[11] M. A. Hannan, M. Arebey, R. A. Begum, and H. Basri, "An automated solid waste bin level detection system using a gray level aura matrix," Waste Manag., vol. 32, no. 12, pp. 2229-2238, 2012.

[12] P. O. Leit?o, M. B. Marques, P. Dep, and I. Porto, "Reliability Of A Line-of-view Sensor For Recycling Point Waste Containers," in ISWA/APESB2009 World Congress, 2009.

[13] S. Longhi, D. Marzioni, E. Alidori, G. Di Buo, M. Prist, M. Grisostomi, and M. Pirro, "Solid Waste Management Architecture using Wireless Sensor Network technology," 2012.

[14] V. Catania and D. Ventura, "An Approach for Monitoring and Smart Planning of Urban Solid Waste Management Using Smart-M3 Platform," in 15th Conference of Open Innovations Association FRUCT, 2014, pp. 24-31.

[15] D. Cassaniti, "A Multi-Hop 6LoWPAN Wireless Sensor Network for Waste Management Optimization," 2011.

[16] "EU FP7 Project: 'Future Cities.'" [Online]. Available: www.futurecitiesproject.eu.

[17] "EU FP7 Project: 'Straightsol.'" [Online]. Available: www.straightsol.eu.

[18] F. McLeod, G. Erdogan, T. Cherrett, T. Bektas, N. Davies, D. Shingleton, C. Speed, J. Dickinson, and S. Norgate, "Improving collection efficiency through remote monitoring of charity assets," Waste Manag., vol. 34, no. 2, pp. 273-280, 2014.

[19] "UBi: Ultrasonic sensor." [Online]. Available: www.smartbin.com.

[20] "U-Dump: Urban waste collection sensor." [Online]. Available: www.urbiotica.com.

[21] Libelium Waspmote for Smart Cities. [Online]. Available: www.libelium.com

[22] Enevo. [Online]. Available: www.enevo.com

[23] Open Source Software Society, "The smart garbage bin." [Online]. Available: github.com/ellak-monades-aristeias/Kadoi-aporrimatwn

[24] George Asimakopoulos, Sotiris Christodoulou, Andreas Gizas, Vassilios Triantafillou, Giannis Tzimas, Emmanouil Viennas John Gialelis, Dimitris Karadimas, Andreas Papalambrou, "Towards a Dynamic Waste Collection Management System using Real-time and Forecasted Data", 2nd Workshop on Innovative European Policies and Applied Measures for Developing Smart Cities (IPMSC2015) - 16th International Conference on Engineering Applications of Neural Networks (EANN 2015), Island of Rhodes, Greece, 25-28 September 2015

[25] Delay Tolerant Networking. [Online]. Available: en.wikipedia.org/wiki/Delay-tolerant_networking

[26] "ZT-50-mini Active RFID Tag and ZR-USB Active RFID Reader." [Online]. Available: www.tagsense.com.

[27] "MB1040 LV-MaxSonar-EZ4 Datasheet." [Online]. Available: www.maxbotix.com.

[28] Open Street Map. [Online]. Available: www.openstreetmap.org

[29] “General Secretariat for Research and Technology.” [Online]. Available: www.gsrt.gr.

[30] DTN2 implementation, [Online] https://sites.google.com/site/dtnresgroup/home/code/dtn2documentation