Design, Implementation and Evaluation of a Remote Laboratory System for Electrical Engineering Courses

Dimitris Karadimas and Kostas Efstathiou
Dept. of Electrical Engineering and Computer Technology, University of Patras, Greece
{karadimas, efstathiou}@apel.ee.upatras.gr

Abstract

This paper describes an Internet-based laboratory, named Remote Monitored and Controlled Laboratory (RMCLab) developed at University of Patras for electrical engineering laboratory education. The key feature of this remote laboratory is the utilization of real experiments, in terms of instrumentation and lab circuits, rather than simulation or virtual reality environment. RMCLab is able to provide affordably and simultaneously its services to many users through the Internet. A wide variety of lab experiments are supported, including not only fixed circuits but also students' custom circuit designs; thus contributing to students' authentic understanding of theory subjects. RMCLab can be accessed via the web through http://www.apel.ee.upatras.gr/rmclab.

I. Introduction

In almost any engineering department, laboratory experience is an integral part of the educational process. In fact, electrical engineering laboratory education is mandatory and demands an amount of material resources (instrumentation and hardware), which are not always affordable. As a result, the possibility of personal experimental training, for each student in large classes, would be extremely suppressed, leading anywise to a somehow reduced level of education.

The rapid progress of Internet and computer technology, along with its increasing popularity, enables the development of remote laboratories for supporting distance laboratory courses, where the experiments can be accessed, monitored and controlled remotely [1]. This new interpretation of the experimental training procedure offers to the students the opportunity to interact with the laboratory at any time, while at the same time reduces the experiment cost per student and also extends the capabilities of the entire experimental framework [2]. Moreover, remote laboratories can offer high level experimental training if they are able to realize, support and interact with real lab experiments, rather than simulations or simple presentation of the reality.

Many e-learning software systems can be found that enable distance laboratory education via online courses and simulated virtual lab environments [3]. These software systems integrate many of the desired functions, such as presentation of the course theory, communication support, through email, chat rooms and forums, collaboration through discussion pages and self-evaluation questions. Despite the fact that nowadays simulators can accurately estimate the circuits' performance, the employment and utilization of real lab experiments ensure the measurements' reliability while at the same time increase the educational value.

This paper presents the specifications and the structure of an integrated educational platform that enables the instant remote access to real lab experiments, with the use of real hardware and instrumentation. This platform, named Remote Monitored and Controlled Laboratory (RMCLab), is able to provide educational services to a great number of students for a wide range of real electrical engineering experiments, either pre-configured or customizable, at a very low total implementation cost. RMCLab is already in use since March 2004 at the Dept. of Electrical Engineering and Computer Technology of University of Patras, Greece, where it was developed and implemented.

II. The RMCLab System Design Issues

The basic purpose of the developed platform is to provide high quality lab education in electrical engineering courses to a great number of students. The design of such a remote laboratory for real-time Internet-based experiments [4]-[5] should consider all aspects of the system, including communication, instrumentation and hardware control.

The RMCLab system has been designed so as to integrate all potentials of the physical laboratory to a user friendly interface, among other subsystems, such as lab assessment and scheduling, user administration, instrument operation and hardware management. Since a remote laboratory has two user types, the student and the instructor, which have completely different requirements from the system, two different sets of specifications have been assigned, in order to make RMCLab not only usable and acceptable but also necessary, for both types of user.

The primary service that RMCLab should provide to students is the possibility to study on the lab subjects, by

Proceedings of the Sixth International Conference on Advanced Learning Technologies (ICALT'06)
0-7695-2632-2/06 $20.00 © 2006 IEEE

accomplishing their lab-courses at any time and anywhere. For this reason RMCLab's basic specification is defined as the ability to serve simultaneously and at real time, 24-hours per day, 7-days per week, any potential user. Significant role to the acceptance of a remote educational tool plays also the usability, the functionality and the time response of its software components; however these parameters are easily supplied by nowadays software development tools.

An integrated remote laboratory platform should moreover reinforce the instructor's faculties, regarding the lab experiments' setup and the evaluation of students' knowledge on the lab subjects, by providing an effortless, and with the minimum possible human intervention, management of any educational procedure. Therefore, any kind of assessment functionality should be supported; assignment of the required measurements and instruments' settings, as well as multi-type questions. Finally, the ability of the instructor to monitor and interactively advise the students during a remote lab experiment is of great educational value; whereas administrative and automated secretarial procedures integrate the RMCLab system by offering usability and functionality regarding both types of user.

III. Architecture of the RMCLab System

The RMCLab system has been developed based on the conventional client-server architecture as depicted in Fig.1, and consists of the following basic entities: client, instructor client, application server, resource server and lab infrastructure, including the instrumentation and the hardware modules.

The server side of the architecture employs two sub-servers; the Resource Server (RS) and the Application Server (AS). Resource server manages and operates hardware and instrumentation resources, providing to application server an abstract communication language that enables access to lab infrastructure. Application server undertakes all the communication tasks between clients and the physical remote laboratory (resource server and lab instrumentation), as clients are not able to directly access the resource server.

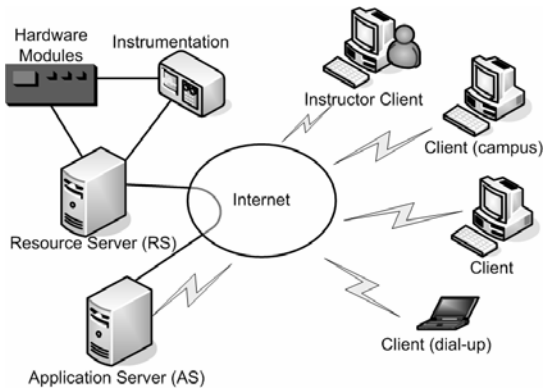

Fig. 1. RMCLab system architecture.

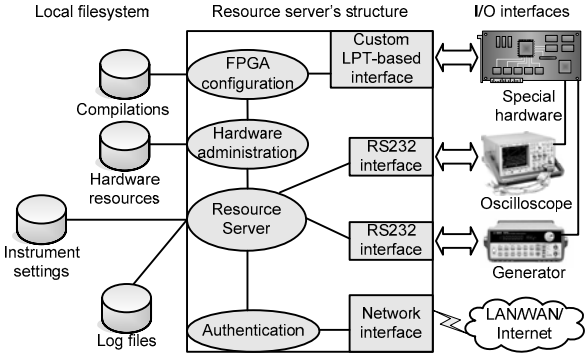

Fig. 2. Software and Hardware modules of the resource server.

This topology simplifies the architecture of the server-side and expands platform's capabilities as it facilitates the development and customization of a resource server, while at the same time enables the utilization of its shared resources by many application servers. Additionally, both instructor and student are able to transparently access physical resources of the remote laboratory, increasing system's flexibility and expandability.

The real measurement laboratory is based on a low cost and easy implementation, while it is realized around the resource server. Resource server is equipped with suitable, custom interface toward the signals of the lab experiment (both digital and analog experiments), via a custom bus based in LPT, and the instruments, via the RS232 interface, as depicted in Fig.2. Standard or other interfaces, like PCI, USB, etc, may be also supported by the resource server.

Multiple types of circuits can be hosted in the platform's resource server; standard, pre-configured or re-configurable analog, digital or mixed circuits. For this reason, resource server is outfitted with a motherboard that is able to host up to 64-cards, where each of them is incorporated with an FPGA and extra auxiliary modules, as depicted in Fig.3.

Each card employs also a PLD, which is responsible for the card addressing and the configuration of the FPGA. Each of these cards can host 8-different analog, digital or mixed independent arbitrary circuits, since the FPGA is segmented into 8-sectors, each of them corresponding to a specific lab experiment. The internal operation of the FPGA is controlled by a register file (TABLE I) which is employed within it.

As each sector of the FPGA can host either a specific multi-mode lab experiment or a user's custom circuit, the mode register and two auxiliary registers control its operation mode and behavior. For example, a single sector could implement both synchronous and asynchronous counters, being realized as two different lab experiments. Sector register points to the active sector, on which measurements are performed. Finally, when a measurement is carried out, two more registers, Probe1

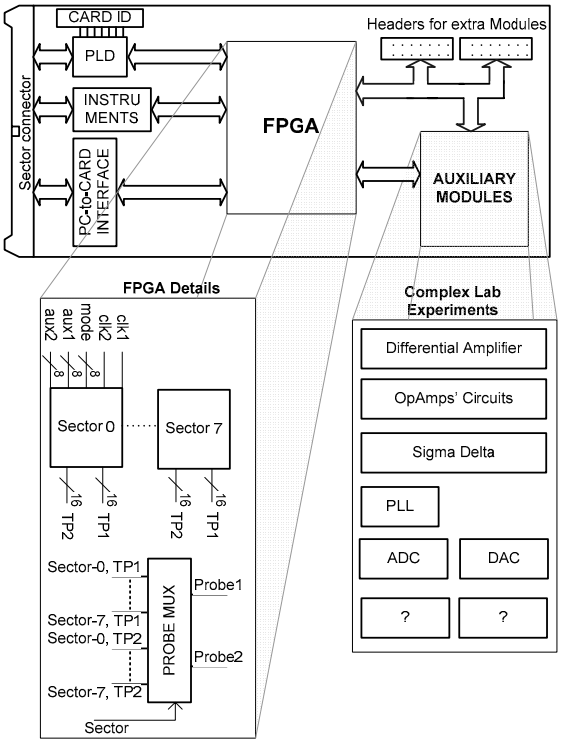

Fig. 3. Hardware architecture.

and Probe2, assign the active nodes of the active sector, on which the two probes of the oscilloscope become physically connected through cross-point switches. Moreover, each card may be equipped with additional on-board or external circuitry, in order to implement a wide range of more complex electronic circuits, which is an offline procedure.

When a client raises a measurement request, application server logs and routes this request to the proper resource server. Afterwards, resource server has to accomplish multiple tasks, as the authentication of the request and the lab infrastructure (hardware and instrumentation) setup, so as to be ready for the requested operations. A hardware administration module is responsible for the aforementioned task, giving first priority to the servicing of the request. This may lead to a real-time online re-configuration of one's card FPGA, so as to implement the requested circuit, or to the removal of an unutilized sector's circuit in order to provide a free sector to the system. As soon as the hardware is configured, the measurement is performed and the acquired data are transmitted back to the client again via the application server. The above procedures serve each

TABLE I. FPGA register file.

Name	Address	Width (bits)	Operation
Sector	0	3	Select the active sector
Probe1	1	4-6	Select the active nodes of Oscilloscope's Ch-A
Probe2	2	4-6	Select the active nodes of Oscilloscope's Ch-B
Aux1	3	8	Auxiliary register 1
Aux2	4	8	Auxiliary register 2
Mode	5	8	Sector's operation mode

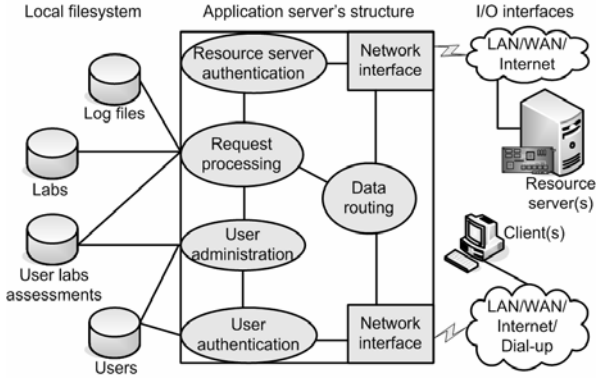

Fig. 4. Software modules of the application Server.

possible request in a FIFO priority so as to time-share the physical resources to all available requests.

Apart from the dataflow control and the routing procedure between client(s) and the resource server(s), application server is also responsible for the logging, assessment and the evaluation of the students' actions. These log files can be offline presented or actively reproduced by the instructor in order to illustrate the students' skills and level of knowledge for each lab experiment. Although some assessment procedures can be automatically performed by the software of the application server, like multiple choice questions and measurements, there are also different types of assessments, self-assigned questions or evaluation on the range and the cohesion of the student's actions, which demand the offline human intervention for accurate and fair evaluation of the students. The above presented characteristics and functionalities of the RMCLab's application server define its architecture, as depicted in Fig.4.

The client part of the RMCLab's system is designed so as to meet the requirements provided by the server side. Thus, client embeds interfaces, unified as scenario interface, for supporting the remote monitor and control of lab infrastructure, like full-functional and user friendly interfaces for lab instrumentation (function generator, oscilloscope) and lab hardware, as is depicted in Fig.5.

In more details scenario interface provides to the student graphic information, related with the real hardware of the corresponding lab experiment.

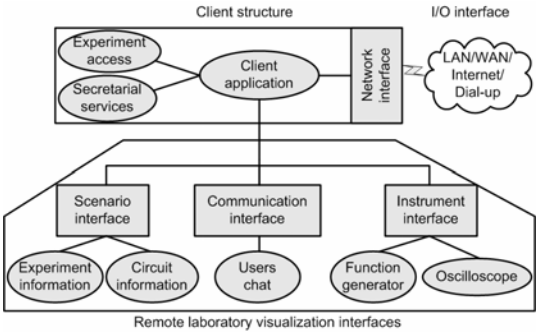

Fig. 5. Software modules of the Client.

Additionally, it enables the student to control circuit parameters of the lab experiment (variable pots, caps, etc) and monitor any node of the circuit by setting the probes of the oscilloscope and the function generator on it. Moreover, scenario interface provides the necessary information, regarding the technical and theoretical aspects of the experiment, among with the prerequisites for the students' evaluation, such as multiple choices, measurement or self-assigned questions; all defined by the instructor.

Finally, RMCLab's platform embeds an identical to the students' one client interface, called as instructor client, which incorporates the ability to replicate, monitor and control any online student's environment to the instructor's side. This feature gives the instructor the ability to closely observe the actions and efficiently tutor any online student, concluding to a 'near-to-real' lab environment.

IV. Advanced RMCLab System's Properties

The architecture described in the previous section allows several functional scenarios for an advanced utilization of RMCLab's system.

The most important benefit of the RMCLab's system architecture is that provides to the students the feasibility to design their own custom circuits and test/measure them under real hardware and real instrumentation. Students can offline design almost any circuit using a separate software package, which can be MAX+plus II or Quartus, both offered at no-cost to the students from Altera. Using one of the specific software packages, students can design their circuits following a reduced set of rules and confirm its proper operation. Once the design is verified at the client-side, it can be easily uploaded to the server-side and after a few seconds students will be able to perform any measurement on their custom design, which is now implemented on real hardware by using real instrumentation.

RMCLab system's architecture is able to support even more functionalities. Assume that a resource server, physically located somewhere in the world, supports and shares through the Internet the hardware and instrumentation required for 'Lab A', as depicted in Fig.6. This shared lab infrastructure can be utilized by one application server in Nederland, where the instructor has developed the required educational material regarding 'Lab A' for his students. Thus, Dutch students are enabled to attend the lab course regarding 'Lab A' in their native language, while the Dutch instructor will be able to take the advantages of this service. At the same time a second application server, located in USA, may also utilize the same lab infrastructure of the resource server supporting 'Lab A', while American instructor can prepare the corresponding required educational material in the native language of his students, enabling also them to attend the specific lab course.

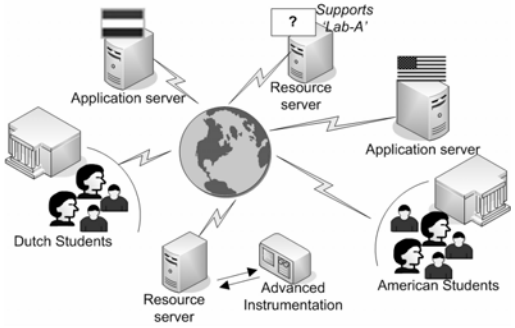

Fig. 6. Advanced RMCLab system utilization.

Obviously, each instructor has the opportunity to mark and review his students' performance according to his own educational and pedagogical criteria, as the set of the assessments rules for each lab is defined in the RMCLab's application server, which is available and accessed by the instructor, while resource server transparently executes the measurement requests.

The prospects of the RMCLab system may hopefully expand world-wide, as the above scenario can be further extended if one adds more resource servers. Each resource server can be expert and focused on a specific subject, incorporating the appropriate hardware and instrumentation. Instructors all over the world may take the advantage of using such laboratory resources and develop educational material in their local application servers, so as to offer advanced experimental training to their students, without any requirement for the development and maintenance of any expensive lab infrastructure.

RMCLab's advanced utilization modes are not limited within the above examples. The real-time use of real hardware and real instrumentation can significantly contribute to the educational procedure, since it enables the instructor to prepare 'Active Lessons' and present in details the operation of a circuit or a system under real-world circumstances.

V. Realized RMCLab System

The architecture described in Section III has been implemented at the University of Patras. Current configuration is a cost effective implementation, which employs a single PC with a Celeron 2.4GHz processor, 396MB RAM for both the resource and the application server of the RMCLab's system. This PC, running Windows 2000 Server, is permanently connected to the campus LAN and through this same LAN to Internet. An Agilent 54622D mixed signal oscilloscope, controlled via RS232@56kbps and an Agilent 33120A function generator, controlled via RS232@19.2kbps are physically connected to this PC.

Hardware interface is implemented based on a custom, low-cost bus, through LPT in EPP mode. Each card of the hardware infrastructure contains an Altera FPGA of the

TABLE II. RMCLab's time response characteristics.

Property	Average Delay (sec)
Hardware setup and measurement time	3
Compilation time in the server side	10
Hardware re-configuration time	5
Measurement delay from client side using PSTN line @56kbps	5

FLEX8K series and other components required for the implementation of the experiments. Currently, all cards are hosted by a small motherboard outfitted with 5-cards, out of 64-cards that hardware structure is able to support, for lab experiments and a dedicated card acting as the power supplier for the hardware infrastructure. These cards have been mounted to a custom-designed box, which also provides the required connectivity to the PC and the instrumentation.

Client software minimum requirements include a PC-based computer running at least Windows '98SE, screen resolution 1024x768 (or higher), DirectX runtime libraries (version 8.1 or higher) and a conventional Internet connection (PSTN or better).

RMCLab's system provides its educational services since March 2004 for the Dept. of Electrical Engineering and Computer Technology of University of Patras, Greece, regarding Analog and Digital Circuits lab experiments. Analog lab experiments include 2-stage, feedback and cascode/folded-cascode amplifiers, whereas digital lab experiments include a wide variety of counters, adders and accumulators. The technical characteristics demonstrated by the up-to-now use of the RMCLab system consist of the average timings/delays, presented in TABLE II.

In particularly, during the second semester of academic year 2004-'05, RMCLab provided to the 3rd year's class (about 90-groups of 3-students each) of the aforementioned department, educational services regarding three laboratory experiments. The first experiment regarded an introductory exercise, aiming at the students' familiarization with the use of RMCLab platform, while the other two regarded synchronous, asynchronous, binary, decimal and programmable counters. For these two obligatory lab-exercises 1264-accesses were logged, of 473h 5m 6s total duration. During this period, up-to-8 simultaneous requests have been raised to the RMCLab resource server, without importing any extra delay to the users' requests servicing. Fig.7 gives a notion of RMCLab usage for this period. Additionally, 17200-measurements were logged on the RMCLab's instrumentation, where 1666 of them regarded the introductory exercise, and 4458, 11076 measurements regarded the second and third obligatory exercise, respectively. For the first obligatory exercise the performed measurements were 4.35-times more than the total number required for completing the exercise, while for the second one this was reduced to 3.97, despite the fact that this exercise was significantly more demanding for the students.

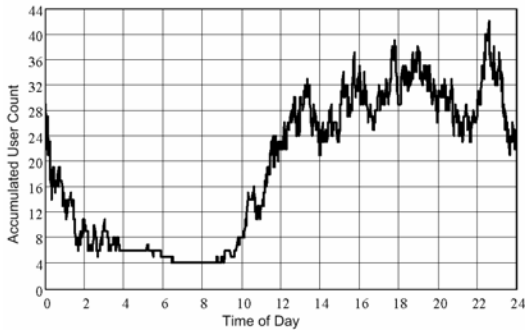

Fig. 7. RMCLab's accumulated usage vs time of the day

Conclusion

RMCLab's system is able to provide a wide range of high educational services in a great number of students. It increases the productivity of the students by enabling them to have access to the lab infrastructure at non-working hours, while at the same time affects significantly their psychological mood regarding the level of the offered education by their institute.

The structure of RMCLab enables sharing of hardware and instrumentation resources, thus makes possible the extensive exploitation of an expensive lab infrastructure, facilitating the wide spread of remote real lab experiments, which are indisputably valuable for engineers' education. Additionally, hardware re-configurability permits the remote implementation and measurement of electronic circuits, providing further more a high-valued educational service.

The concentrated use of RMCLab system during 5-academical semesters, for the courses of Analog and Digital Integrated Circuits, consisting of classes of about 300-students per class, has definitely proved the high value of this educational tool, for the students and for the instructors as well.

References

[1] Ferrero A., Salicone S., Bonora C., Parmigiani M., (2003), "ReMLab: A Java-Based Remote, Didactic Measurement Laboratory", *IEEE Trans. on Instr. and Meas.*, June 2003, pp. 710-715.

[2] A. Bagnasco and A. Scapolla, "A Grid of Remote Laboratory for Teaching Electronics", *2nd International LeGE-WG Workshop on e-Learning and Grid Technologies: a fundamental challenge for Europe*, Paris, March 2003.

[3] J. Palop and M. Teruel, "Virtual Work Bench for Electronic Instrumentation Teaching", *IEEE Trans. on Education*, Feb. 2000, pp. 15-18.

[4] T. Fjeldly and M. Shur, "Lab on the Web: Running Real Electronics Experiments Via the Internet", *Wiley-IEEE Press*, Oct. 2003

[5] C. Ko, B. Chen and J. Chen, "Creating Web-based Laboratories (Advanced Information and Knowledge Processing)", Springer, Oct. 2004.